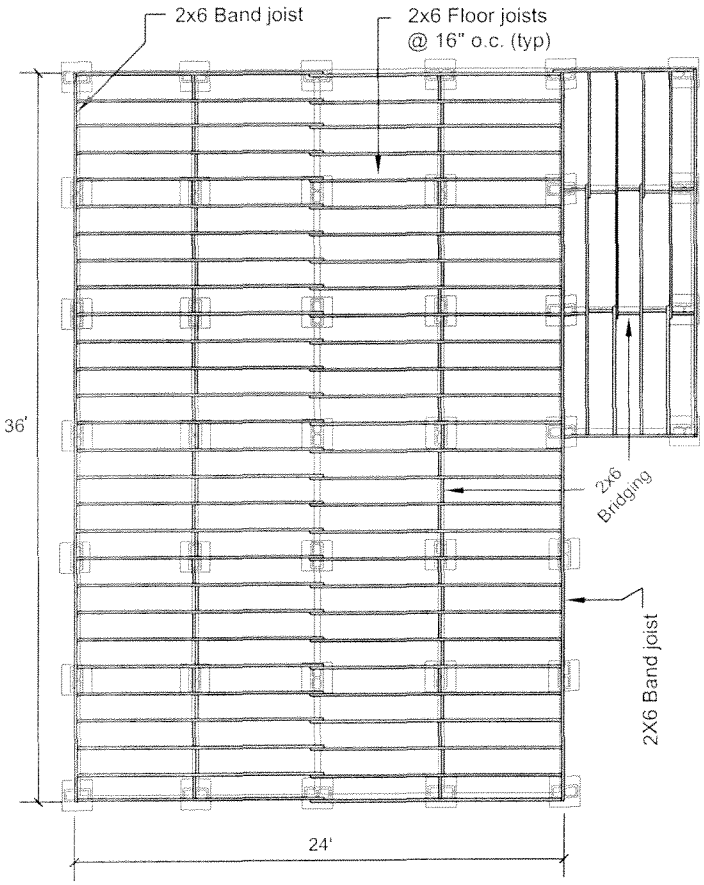

FLOOR FRAMING PLAN

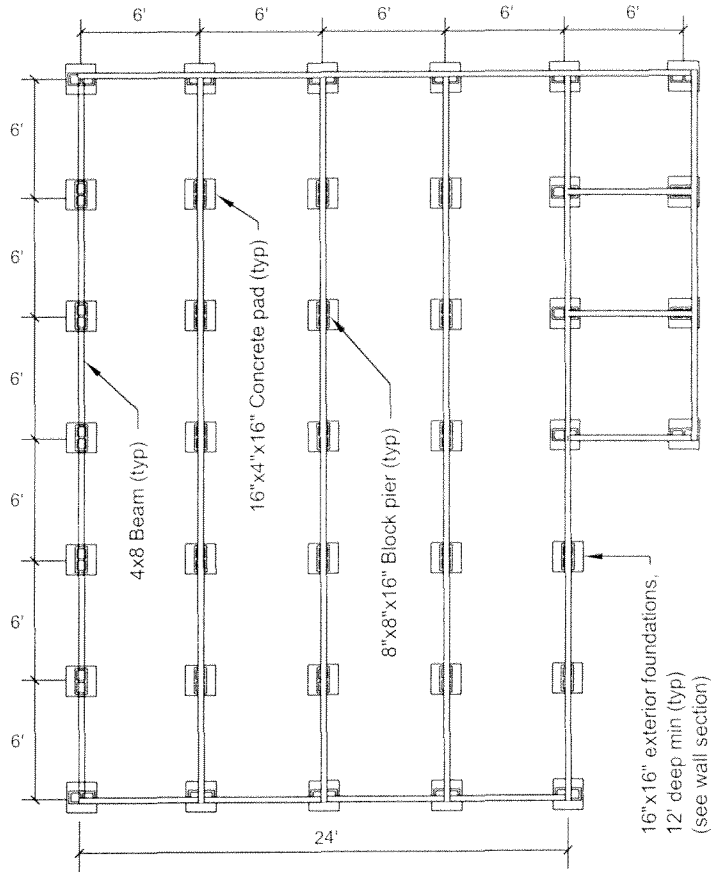

FOUNDATION PLAN

INSTALL WIND STRAPPING TO PROVIDE CONTINUOUS TIES FROM RIDGE TO FOUNDATION AS PER APPENDIX L OF THE CITY OF HOUSTON RESIDENTIAL CODE.

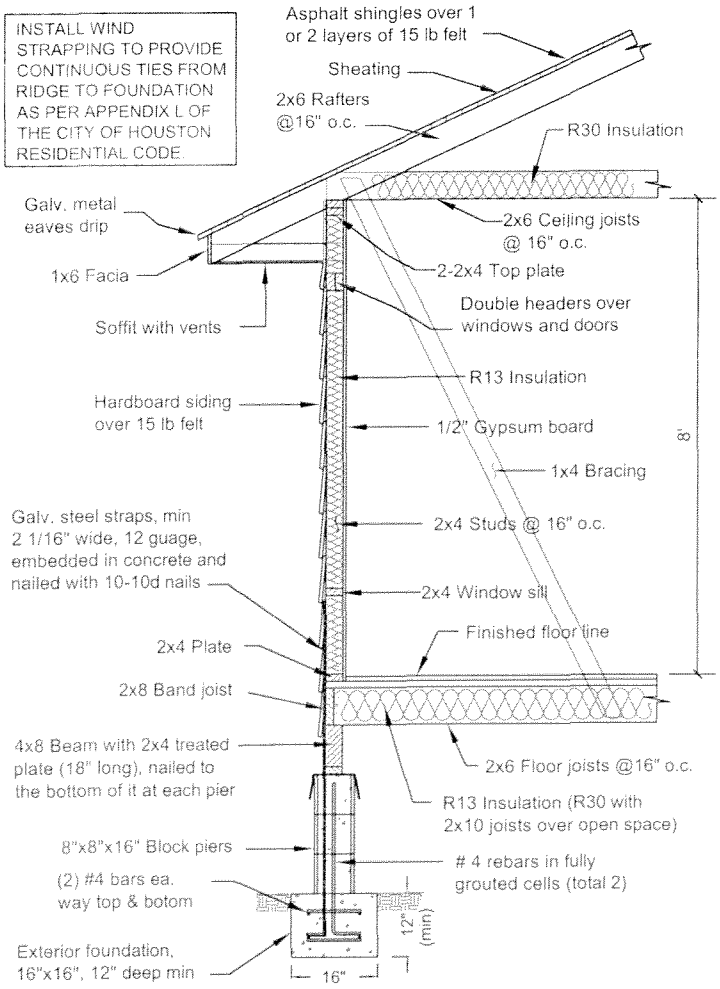

TYPICAL WALL SECTION

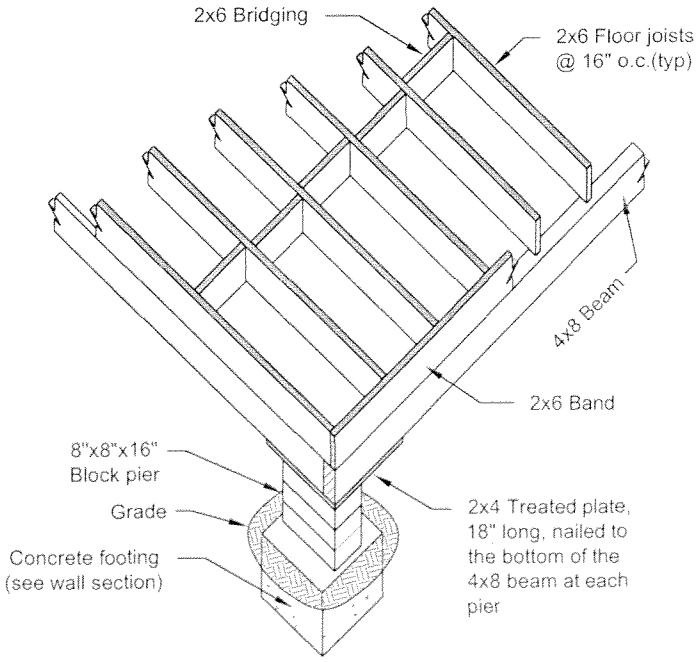

FOUNDATION PIER & FLOOR JOIST DETAIL

CITY OF HOUSTON

DEPARTMENT OF PUBLIC WORKS AND ENGINEERING

RESIDENTIAL INFORMATION PACKAGE - 2

APPROVED BY: BUILDING OFFICIAL

REVISION DATE: 1-8-2014 | DWG No. : 08R13 (Revision 1) | 1 of 1