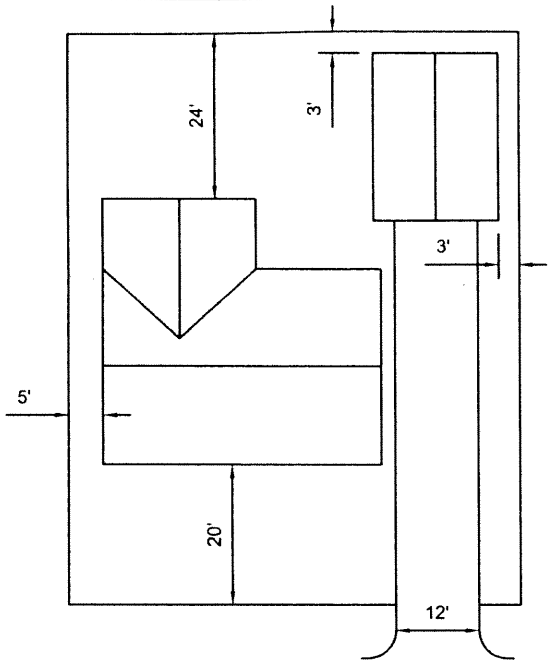

SITE PLAN

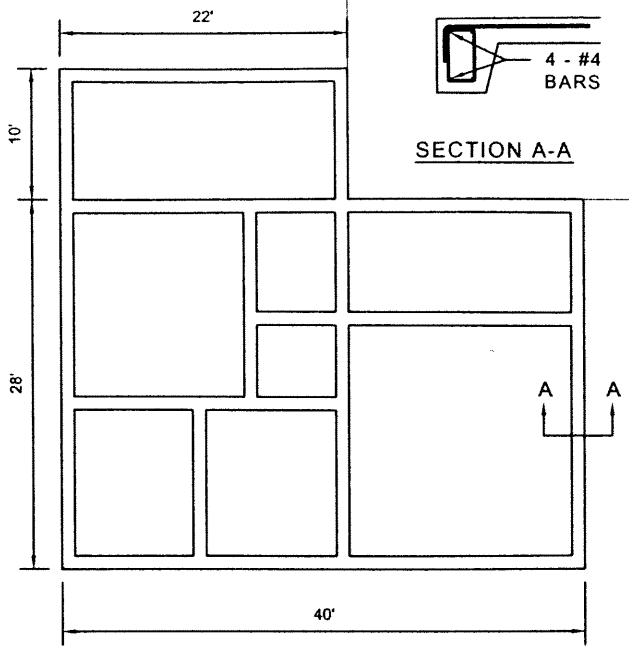

FOUNDATION PLAN

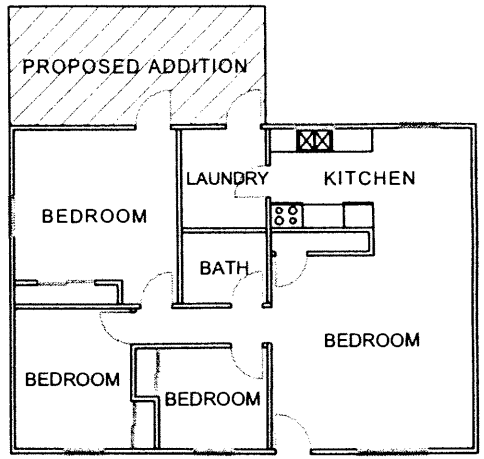

FLOOR PLAN

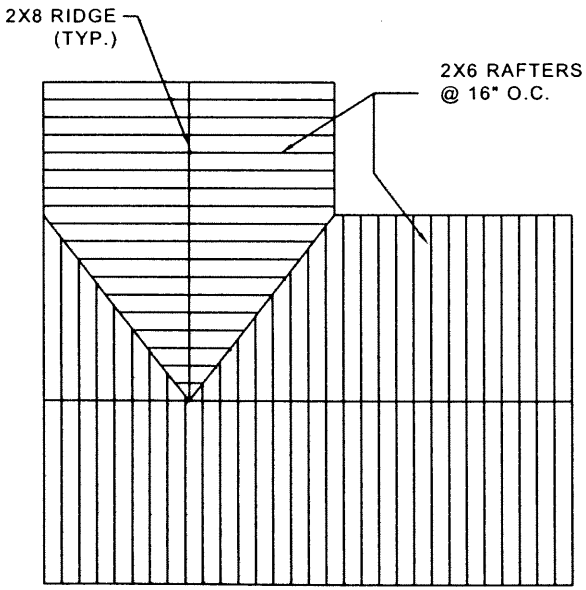

ROOF PLAN

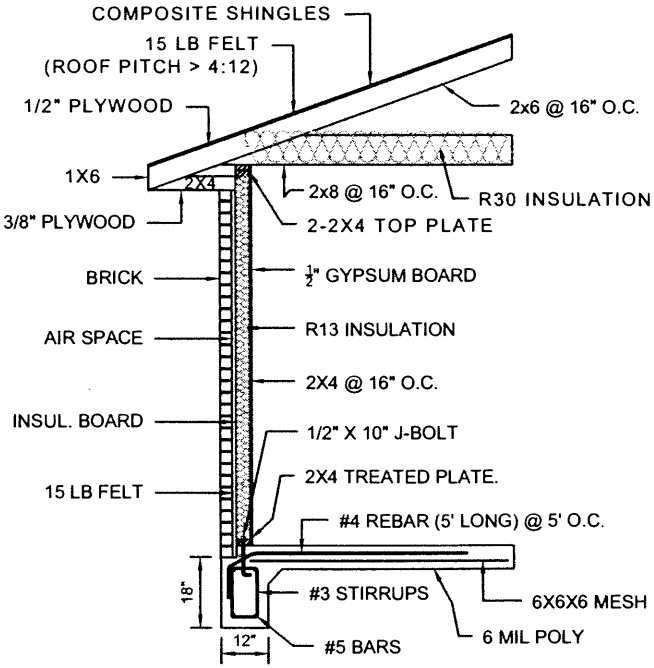

TYPICAL WALL SECTION

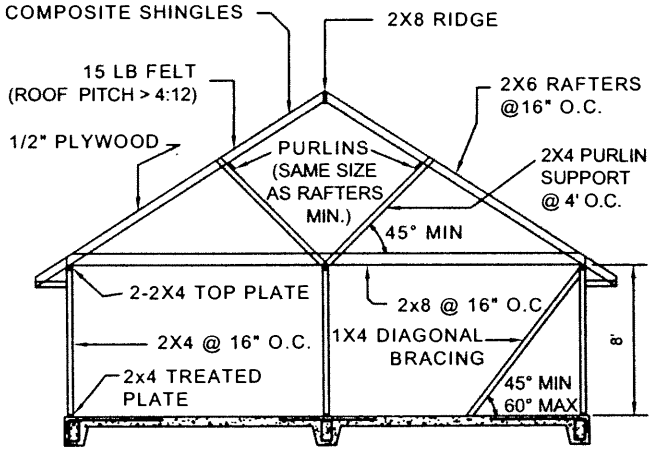

ROOF & FRAME DETAILS

CITY OF HOUSTON

Department of Public Works and Engineering

RESIDENTIAL INFORMATION PACKAGE-1

DATE: 10 / 08 / 09	DWG No: 08R08	1 of 1