CHAPTER 1

ADMINISTRATION

101.1 Title. These regulations shall be known as *the City of Houston Building Code* ~~*of [NAME OF JURISDICTION]*~~, hereinafter referred to as "this code."

The City of Houston Construction Code collectively includes this document and certain other codes, pamphlets, specifications and documents that are adopted in or by reference through the Adopting Ordinance, which appears in the preamble of this code. A predecessor document to this code was known as the City of Houston Building Code–General Provisions, and any reference to the City of Houston Building Code–General Provisions in other jurisdiction ordinances shall be construed to mean this code. In certain instances, references to the building code will be found in ordinances, contracts, and other documents of the jurisdiction. In any instance in which that reference was intended to encompass the codes that collectively constitute the City of Houston Construction Code, then it shall be so construed.

101.2 Scope. The provisions of this code shall apply to the construction, alteration, movement, enlargement, replacement, repair, equipment, use and occupancy, location, maintenance, removal and demolition of every building or structure or any appurtenances connected or attached to such buildings or structures, except work located primarily in a public way, public utility towers and poles, and mechanical equipment not specifically regulated in this code, and hydraulic flood control structures.

Exceptions:

~~1.~~ Except as noted in Section 101.4.1, ~~D~~detached one- and two-family dwellings and multiple single-family dwellings (town houses) not more than three stories above grade plane in height with separate means of egress and their accessory structures shall comply with the *2000 International Residential Code for One- and Two-Family Dwellings* as adopted by the State of Texas in Subchapter G of Chapter 214 of the Texas Local Government Code and amended by the Table of Houston Amendments adopted by this jurisdiction.

~~2. Existing buildings undergoing repair, alterations or additions and change of occupancy shall be permitted to comply with the *International Existing Building Code*.~~

101.2.1 Appendices. Provisions in the appendices shall not apply unless specifically adopted. Appendices E, K, L, M and N, including any amendments thereto adopted by this jurisdiction, are hereby adopted and shall be incorporated into and made part of this code.

101.4.1 Electrical. The provisions of the ~~ICC~~ *Electrical Code* shall apply to the installation of electrical systems, including alterations, repairs, replacement, equipment, appliances, fixtures, fittings and appurtenances thereto.

Exception: Installation and maintenance of electrical wiring and related components in structures to which the *2000 International Residential Code* referenced in Section 101.2 above is applicable shall, as provided by Chapter 214 of the Texas Local Government Code, be governed by the *National Electrical Code* as it existed on May 1, 2001, and any amendments thereto adopted by the jurisdiction.

101.4.2 Gas. The provisions of the ~~International Fuel Gas~~ *City of Houston Plumbing Code* shall apply to the installation of gas piping from the point of delivery, gas appliances and related accessories as covered in this code. These requirements apply to gas piping systems extending from the point of delivery to the inlet connections of appliances and the installation and operation of residential and commercial gas appliances and related accessories. This code includes numerous references to the

International Fuel Gas Code. For the sake of convenience and cost savings to the public in the preparation of Houston Supplement pages to this code, those references have not been revised unless the text of the provision in which they appear has otherwise been revised by this jurisdiction. Any such references shall be regarded as references to the corresponding code as adopted by this jurisdiction from time to time. This jurisdiction reserves the right to adopt codes based upon promulgations of organizations other than the International Code Council, including but not limited to the Uniform Series Codes, to the extent permitted by State law. Any reference to a specific chapter, section, or provision of a code that has not been adopted by this jurisdiction shall be construed to mean the corresponding provision of the corresponding code as adopted by this jurisdiction.

Exception: Work governed by the *International Residential Code*.

101.4.3 Mechanical. The provisions of the ~~*International*~~ *City of Houston Mechanical Code* shall apply to the installation, alteration, repair, and replacement of mechanical systems, including equipment, appliances, fixtures, fittings and/or appurtenances, including ventilating, heating, cooling, air-conditioning and refrigeration systems, incinerators, and other energy-related systems. This code includes numerous references to the *International Mechanical Code*. For the sake of convenience and cost savings to the public in the preparation of Houston Supplement pages to this code, those references have not been revised unless the text of the provision in which they appear has otherwise been revised by this jurisdiction. Any such references shall be regarded as references to the corresponding code as adopted by this jurisdiction from time to time. This jurisdiction reserves the right to adopt codes based upon promulgations of organizations other than the International Code Council, including but not limited to the Uniform Series Codes, to the extent permitted by State law. Any reference to a specific chapter, section, or provision of a code that has not been adopted by this jurisdiction shall be construed to mean the corresponding provision of the corresponding code as adopted by this jurisdiction.

Exception: Work governed by the *International Residential Code*.

101.4.4 Plumbing. The provisions of the ~~*International*~~ *City of Houston Plumbing Code* shall apply to the installation, alteration, repair and replacement of plumbing systems, including equipment, appliances, fixtures, fittings and appurtenances, and where connected to a water or sewage system and all aspects of a medical gas system. ~~The provisions of the *International Private Sewage Disposal Code* shall apply to private sewage disposal systems.~~ This code includes numerous references to the *International Plumbing Code*. For the sake of convenience and cost savings to the public in the preparation of Houston Supplement pages to this code, those references have not been revised unless the text of the provision in which they appear has otherwise been revised by this jurisdiction. Any such references shall be regarded as references to the corresponding code as adopted by this jurisdiction from time to time. This jurisdiction reserves the right to adopt codes based upon promulgations of organizations other than the International Code Council, including but not limited to the Uniform Series Codes, to the extent permitted by State law. Any reference to a specific chapter, section, or provision of a code that has not been adopted by this jurisdiction shall be construed to mean the corresponding provision of the corresponding code as adopted by this jurisdiction.

Exception: Work governed by the *International Residential Code*.

101.4.5 DELETE AND RESERVE.

101.4.6 Fire prevention. The provisions of the ~~*International*~~ *City of Houston Fire Code* shall apply to matters affecting or relating to structures, processes and premises from the hazard of fire and explosion arising from the storage, handling or use of structures, materials or devices; from conditions hazardous to life, property or public welfare in the occupancy of structures or premises; and from the construction, extension, repair, alteration or removal of fire suppression and alarm systems or fire hazards in the structure or on the premises from occupancy or operation. This code includes numerous references to the *International Fire Code*. For the sake of convenience and cost savings to the public in the preparation of Houston Supplement pages to this code, those references have not been revised unless the text of the provision in which they appear has otherwise been revised by this

jurisdiction. Any such references shall be regarded as references to the corresponding code as adopted by this jurisdiction from time to time. This jurisdiction reserves the right to adopt codes based upon promulgations of organizations other than the International Code Council, including but not limited to the Uniform Series Codes, to the extent permitted by State law. Any reference to a specific chapter, section, or provision of a code that has not been adopted by this jurisdiction shall be construed to mean the corresponding provision of the corresponding code as adopted by this jurisdiction.

101.4.7 Energy. ~~The provisions of the *International Energy Conservation Code* shall apply to all matters governing the design and construction of buildings for energy efficiency.~~ *The 2000 International Energy Conservation Code* has been adopted by the State of Texas pursuant to Chapter 388 of *the Texas Health and Safety Code*. *The 2000 International Energy Conservation Code* and any amendments adopted as authorized by state law shall be enforced by this jurisdiction in accordance with state law.

102.1 General. Where, in any specific case, different provisions of the *Electrical Code*, the *Mechanical Code*, the *Plumbing Code*, and this code specify different materials, methods of construction or other requirements, the most restrictive shall govern. Where there is a conflict between a general requirement and a specific requirement, the specific requirement shall be applicable. Where, in any specific instance, the applicable provisions of the *Building Code*, the *City Code*, the *Electrical Code*, the *Mechanical Code*, or the *Plumbing Code* specify different materials, methods of construction, or other requirements than the *Fire Code*, and the building official and the fire marshal are unable to mutually reconcile the requirements by issuing a written interpretation, then either of them may refer the matter to the General Appeals Board created under the *Building Code*, which shall conduct a review of the matter and issue a written code interpretation based upon the apparent intent of the codes involved. Notwithstanding any other provision, interpretations that are issued by the General Appeals Board shall not be subject to further appeal. Wherever in this code reference is made to the appendix, the provisions in the appendix shall not apply unless specifically adopted.

102.6 Existing and annexed structures. .

102.6.1 Existing structures. A building in existence within the jurisdiction at the time of the passage of this code may have its existing use or occupancy continued, if:

1. Such use or occupancy was legal at the time of the passage of this code;
2. The building is in compliance with all applicable provisions of Appendix L; and
3. The continued use and occupancy is not unsafe pursuant to the provisions of Section 115.

102.6.2 Annexed structures. Any building in existence prior to the annexation into the jurisdiction of the land on which it is situated may have its use and occupancy continued if:

1. Such use or occupancy was legal under the building design and construction codes and related laws applicable in the jurisdiction in which the building was situated at the time immediately prior to its annexation;
2. The building is in compliance with all applicable provisions of Appendix L; and
3. The continued use and occupancy is not unsafe pursuant to the provisions of Section 115.

SECTION 103
CODE ENFORCEMENT DIVISION

103.1 Creation of enforcement agency. The code enforcement division is hereby created within the jurisdiction's Department of Public Works and Engineering, and the official in charge thereof shall be known as the building official.

103.3 Deputies. In accordance with the prescribed procedures of this jurisdiction and with the concurrence of the appointing authority, the building official shall have the authority to appoint a deputy building official, the related technical officers, inspectors, plan examiners and other employees. Such employees shall have powers as delegated by the building official.

104.6 Right of entry. Where it is necessary to make an inspection to enforce the provisions of this code, or where the building official has reasonable cause to believe that there exists in a structure or upon a premises a condition which is contrary to or in violation of this code which makes the structure or premises unsafe, dangerous or hazardous, the building official may enter the structure or premises at reasonable times to inspect or to perform the duties imposed by this code, provided that if such structure or premises be occupied that credentials be presented to the occupant and entry requested. If such structure or premises is unoccupied, the building official shall first make a reasonable effort to locate the owner or other person having charge or control of the structure or premises and request entry. If entry is refused, the building official shall have recourse to the remedies provided by law to secure entry.

When, due to an emergency, immediate entry is necessary to protect life or property, or when the building official shall have first obtained a proper inspection warrant or other remedy provided by law to secure entry, no owner or occupant or any other person having charge, care or control of any building or premises shall fail or neglect, after proper request is made as herein provided, to promptly permit entry therein by the building official for the purpose of inspection and examination pursuant to this code.

104.8 Liability. . Except as otherwise provided by law, the building official shall not personally be liable in damages for any act or omission arising out of any official action taken to implement and enforce the provisions of this code. Additionally, except as otherwise provided by law, the building official shall not personally be liable in damages for any action or omission taken in the course and scope of employment. Where and to the extent consistent with the provisions of Article X of Chapter 2 of the City Code, this jurisdiction shall provide legal representation and indemnification for any suit brought against the building official because of acts or omissions performed in the enforcement of this code.

This code shall not be construed to relieve from or lessen the responsibility of any person owning, operating, or controlling any building or structure for any damages to persons or property caused by defects, nor shall the code enforcement agency or its parent jurisdiction be held as assuming any such liability by reason of the inspections authorized by this code or any permits or certificates issued under this code.

104.12 Occupancy violations. Whenever any building or structure or equipment located therein is regulated by this code and is being used contrary to the provisions of this code, the building official may order such use discontinued and the structure, or portion thereof, vacated by notice served on any person causing such use to be continued.

If the use creates a serious and immediate hazard to life or property, the building official shall order the use discontinued immediately and give notice of a right to a hearing on the matter pursuant to Section 116. Upon request, such a hearing shall be held within three business days unless the owner requests an extension of time.

In all situations where there is no serious and immediate hazard to life or property, the building official shall not issue an order requiring such use to be discontinued and the structure, or portion thereof, to be vacated until after giving notice of a right to a hearing on the matter pursuant to Section 116.

Whenever an order is issued to discontinue a use or vacate a structure or portion thereof pursuant to this section, the person shall discontinue the use within the time prescribed by the building official unless the building official first determines that the person has brought the building, structure or equipment into compliance with this code.

105.1 Required. Any owner or authorized agent who intends to construct, enlarge, alter, repair, move, demolish, or change the occupancy of a building or structure, or to erect, install, enlarge, alter, repair, remove, convert or replace any electrical, gas, mechanical or plumbing system, the installation of which is regulated by this code, or to cause any such work to be done, shall first make application to the building official and obtain the required permit, and no person shall cause, suffer or permit the same to be done unless a separate permit for each building or structure has first been obtained.

105.2 Work exempt from permit. Exemptions from permit requirements of this code shall not be deemed to grant authorization for any work to be done in any manner in violation of the provisions of this code or any other laws or ordinances of this jurisdiction. Permits shall not be required for the following:

Building:

1. One-story detached accessory structures used as tool and storage sheds, playhouses and similar uses, provided the floor area does not exceed 120 square feet (11.15 m²).
2. Fences not over 8 feet (2438.64 mm) high that are not constructed of masonry or concrete.
3. Oil derricks.
4. Retaining walls which are not over 4 feet (1219 mm) in height measured from the bottom of the footing to the top of the wall, unless supporting a surcharge or impounding Class I, II or III-A liquids.
5. Water tanks supported directly upon grade if the capacity does not exceed 5,000 gallons (18 925 L) and the ratio of height to diameter or width does not exceed 2 to 1.
6. Sidewalks and driveways that are not in the public way and not more than 30 inches (762 mm) above grade and not over any basement or story below.
7. Painting, papering, tiling, carpeting, cabinets, counter tops and similar finish work.
8. Temporary motion picture, television and theater stage sets and scenery.
9. Prefabricated swimming pools accessory to a one- or two-family dwelling which the walls are entirely above grade and if the capacity does not exceed 5,000 gallons (18 297 L)
10. Shade cloth structures constructed for nursery or agricultural purposes and not including service systems.
11. Swings and other playground equipment other than those regulated by Section 402.11 of this Code.
12. Window awnings supported by an exterior wall which do not project more than 54 inches (1372 mm) from the exterior wall and do not require additional support of Group R-3, as applicable in Section 101.2, and Group U occupancies.
13. Movable cases, counters, and partitions not over 5 feet 9 inches (1753 mm) in height.
14. Flagpoles that support an appurtenance that weighs less than 150 pounds (68 kg), provided it is not more than 75 feet(22 680 mm) tall if mounted on the ground or not more than 25 feet (7620 mm) taller than the building if mounted on a building.
15. A tower under 75 feet (22 680 mm) in height that meets the following conditions:

    15.1 Tower structures used primarily for the support of amateur and citizens' band radio or private television antennae;

15.2 Tower structures on real property owned, leased, held or used, or dedicated for use by a public utility for rendering its service, such as tower structures used primarily for the transmission of electrical power by a public utility or the conveyance of communications over a telephone wire-line system operated by a public utility;

15.3 High mast tower structures or antennas built on land on, along or adjacent to streets, roads, highways and bridges maintained by the state or a political subdivision of the state; and

15.4 Tower structures constructed or placed on land or other structures owned, leased, held or dedicated for use by the state or federal government or any political subdivision thereof, which land or other structures are used by the governmental entity primarily for rendering fire, police or other public protection services or utility services, whether or not the tower structure is used jointly by the governmental entity and any other public or private person or entity for other and additional public or private purposes.

A building permit for any tower structure that is 60 feet (18 288 mm) or more in height and does not meet these exemptions shall not be issued unless a special permit has been obtained pursuant to Section 41-51 of the City Code.

16. A "work of art" as defined in Section 2-326 of the City Code.

105.2.1 — DELETE IN ITS ENTIRETY.

105.2.2 — DELETE IN ITS ENTIRETY.

105.2.3 — DELETE IN ITS ENTIRETY.

105.5 Expiration. For purposes of this subsection, the determination whether work has commenced under a permit or whether work has been abandoned under a permit shall be based upon whether the permit holder requests an inspection of the work performed under the permit by the building official. If work is not commenced under a permit within 180 days of the date of issuance or is abandoned at any time for a period of 180 consecutive days, the permit shall lapse. An elapsed permit shall expire 180 days following the date that it lapsed unless, before the 180th day following the date that the permit lapsed, the permit holder obtains reactivation of the permit by:

1. Requesting reactivation of the permit by the building official; and
2. Requesting an inspection of work performed under the permit by the building official.

A permit may be reactivated only one time, and it shall expire if the work is again abandoned for a period of 180 consecutive days. In order to recommence work under an expired permit, the permit holder shall pay the full permit fee applicable and submit plans that comply with this code for the previously uninspected portion of the work.

Exception: The building official may, upon request, perform a final inspection of work for which the permit has expired or reactivate a permit for the purpose of issuing a certificate of occupancy or a certificate of compliance.

105.6 Suspension or revocation. The building official is authorized to suspend or revoke a permit issued under the provisions of this code wherever the permit issued in error or on the basis of incorrect, inaccurate or incomplete information, or in violation of any ordinance or regulation or any of the provisions of this code. Prior to taking such action, the building official shall provide notice of a right to a hearing on the matter pursuant to Section 116.

106.5 Retention of construction documents. One set of approved construction documents may be retained by the building official for a period of not less than 180 days from date of completion of the permitted work, or as required by state or local laws.

107.3 Temporary power. The building official is authorized to give permission to temporarily supply and use power in part of an electric installation before such installation has been fully completed and the final certificate of completion has been issued. The part covered by the temporary certificate shall comply with the requirements specified for temporary lighting, heat or power in the *Electrical Code*.

108.2 Schedule of permit fees. On buildings, structures, electrical, gas, mechanical, and plumbing systems or alterations requiring a permit, a fee for each permit shall be paid as required, in accordance with the schedule as established by Section 117.

108.3 Building permit valuations. The applicant for a permit shall provide an estimated permit value at time of application. Permit valuations shall include total value of work, including materials and labor, for which the permit is being issued, such as electrical, gas, mechanical, plumbing equipment and permanent systems. If, in the opinion of the building official, the valuation is underestimated on the application, the permit shall be denied, unless the applicant can show detailed estimates to meet the approval of the building official. Final building permit valuation shall be set by the building official. The value to be used in computing the permit fee for alterations, remodeling or repairs shall be the total value of all construction work for which the permit is issued.

108.4 Work commencing before permit issuance. Any person who commences any work on a building, structure, electrical, gas, mechanical or plumbing system before obtaining the necessary permits shall be subject to a_ fee established by the building official that shall be in addition to the required permit fees. The investigation fee shall be equal to the amount of the permit fee required by this code.

108.6 Refunds. The building official may authorize refunding of any fee paid hereunder that was erroneously paid or collected due to an error by one or more city employees. This provision shall not be applicable if the error occurred because of incorrect information provided by the applicant.

The building official may authorize the refunding of not more than 90 percent of the amount in excess of $25.00 of the permit fee paid when no work has been done under a permit issued in accordance with this code. If work has been done under the permit, no refund may be authorized. The plan review portion of the permit fee is nonrefundable.

The building official shall not authorize refunding of any fee paid except on written application filed by the original permittee not later than 180 days after the date of fee payment.

109.3.3 DELETE AND RESERVE.

109.3.5 Lath inspection. Lath inspections shall be made after lathing , interior and exterior, is in place, but before any plastering is applied

.

109.3.7 DELETE AND RESERVE.

109.3.8 Other inspections. In addition to the inspections specified above, the building official is authorized to make or require other inspections of any construction work to ascertain compliance with the provisions of this code and other laws that are enforced by the Code Enforcement Branch.

109.3.11 Reinspection. A reinspection fee may be assessed for each inspection or reinspection when the portion of work for which inspection is called is not complete or when corrections called for are not made.

This section is not to be interpreted as requiring inspection fees the first time a job is rejected for failure to comply with the requirements of this code, but as controlling the practice of calling for inspections before the job is ready for such inspection or reinspection.

Reinspection fees may be assessed when the inspection record card is not posted or otherwise available on the work site, when the approved plans are not readily available to the inspector, for failure to provide access on the date for which inspection is requested, or for deviating from plans requiring the approval of the building official.

To obtain a reinspection, the applicant shall make a request and pay the reinspection fee in accordance with Section 117.

In instances where reinspection fees have been assessed, no additional inspection of the work will be performed until the required fees have been paid.

110.1 Use and occupancy. No building or structure, or portion thereof such as an individual business lease space, shall be used or occupied, and no change in the existing occupancy classification of a building or structure or portion thereof shall be made until the building official has issued a separate certificate of occupancy for each space therefor as provided herein. For purposes of this section, a space means a leasehold or tenancy held or occupied by an individual or entity for its sole use and may include one or more rooms. Issuance of a certificate of occupancy shall not be construed as an approval of a violation of the provisions of this code or of other ordinances of the jurisdiction.

Exception: Group R, Division 3 and Group U occupancies, and individual dwelling units or sleeping units do not require a certificate of occupancy.

110.2 Certificate issued. After the building official inspects the building or structure and finds no violations of the provisions of this code or other laws that are enforced by the code enforcement agency, the building official shall issue a certificate of occupancy that contains the following:

1. The building permit number or project number.
2. The address of the structure.
3. A description of that portion of the structure for which the certificate is issued.
4. A statement that the described portion of the structure has been inspected for compliance with the requirements of this code for the occupancy and division of occupancy and the use for which the proposed occupancy is classified.
5. The name of the building official.
6. The edition of the code under which the permit was issued.
7. The use and occupancyof the building or portion thereof.
8. The type of construction as defined in Chapter 6.
9. The design occupant load.
10. If an automatic sprinkler system is provided, whether the sprinkler system is required.
11. Any special stipulations and conditions of the building permit.

110.4 Revocation. The building official is authorized to, in writing, suspend or revoke a certificate of occupancy issued under the provisions of this code after notice of a right to a hearing on the matter pursuant to Section 116 wherever the certificate is issued in error, or on the basis of incorrect information supplied, or where it is determined that the building or structure or portion thereof is in violation of any ordinance or regulation or any of the provisions of this code.

110.5 Posting. The certificate of occupancy shall be posted in a conspicuous place on the premises and shall not be removed except by the building official.

112.1 Organization. There is hereby created a General Appeals Board consisting of 10 members. Five members at a meeting shall constitute a quorum.

112.1.1 Membership. The positions shall be filled as follows:

Position 1– By an architect registered as such under the laws of the State of Texas who shall be actively engaged in the practice of architecture of heavy construction works.

Position 2– By an architect registered as such under the laws of the State of Texas who shall be actively engaged in the practice of architecture of residential works.

Position 3– By a professional engineer registered as such under the laws of the State of Texas who shall be actively engaged in practice as a structural engineer.

Position 4– By a professional engineer registered as such under the laws of the State of Texas who shall be actively engaged in practice as a mechanical engineer.

Position 5– By a person who shall be actively engaged in the business of residential construction.

Position 6– By a person who shall be actively engaged in the business of general contracting of heavy construction work.

Position 7– By a well-respected citizen of the jurisdiction who shall be chairman of the board.

Position 8– By the building official, who shall also serve as secretary of the board.

Position 9– By the fire marshal.

Position 10– By a professional engineer registered as such under the laws of the State of Texas who is actively engaged in practice as an electrical engineer.

The jurisdiction's Legal Department shall have an attorney present for each board meeting. The attorney shall advise the board on legal matters relative to topics under the board's authority.

112.1.2 Authorized representatives. The building official and the fire marshal, from time to time, may designate in writing a person under the said official's supervision to act as a duly authorized representative of the said official. Said representative shall enjoy all rights and privileges of the position. A copy of such a designation, specifying the dates any such person shall act as representative of the building official or of the fire marshal, shall be filed with the minutes of the board.

112.1.3 Term of appointment. Other than the members in Positions 8 and 9, who shall serve ex officio, members of the board shall be appointed by the Mayor, with the approval of the City Council, and shall serve for a term of two years. The terms of office for the appointees to Positions 1, 3, 5 and 7 shall expire on the second day of January of each odd-numbered year, and terms of office for the appointees to Positions 2, 4, 6 and 10 shall expire on the second day of January of each even-numbered year; however, each member shall continue in office until the member's respective successor is appointed and qualified.

The adoption of this code shall not terminate the term of office of any person currently serving on the board, and any person who is currently serving on the board shall continue to serve in the position for which the person was appointed and confirmed until a successor is appointed and qualified.

112.1.4 Vacancies. Whenever any appointive position on the board becomes vacant by reason of death, resignation or removal, said vacancy shall be filled for the unexpired term of the member being replaced. Should a vacancy occur on the board, the Mayor shall appoint, subject to confirmation by the City Council, another qualified person to serve the remainder of the term of such vacancy.

112.1.5 Removal. Any member of the board may be removed at any time by the Mayor without consent of the City Council.

112.1.6 Compensation. Each member of the board shall be compensated at the rate of $50.00 per diem for each meeting the member attends at which a quorum is present; provided, however, no member shall be paid for more than three meetings in any one month. A jurisdiction employee member of the board shall be paid only for those meetings that the employee attends at which a quorum is present that are held outside of or continue beyond the employee's working hours.

112.1.7 Conflict of interest. In each instance where this code provides for a jurisdiction employee to serve as a voting member of any board created by the provisions of this code, such jurisdiction employee member shall not vote as a member of such board on any motion, resolution, decision, interpretation or recommendation by the board concerning a decision or interpretation or an appeal from a decision or interpretation of any provision of this code or related ordinances made by the jurisdiction employee member.

112.2 Duties of the Board. The duties of the board are to interpret the provisions of this code in appeals from decisions of the building official; to settle possible jurisdiction disputes among the Plumbing, Electrical, and Air Conditioning Appeals Boards; and to hear appeals from the building official as to the suitability of alternate materials or alternate methods of construction other than those relating to air-conditioning, plumbing, and electrical. The board also may make recommendations to the Mayor for amendments to this code.

112.3 . **Procedures**. The board shall adopt reasonable rules and regulations for conduct of its duties. Petitions for hearings before the board shall be made in writing and filed with the building official and shall be heard by the board within 30 days after the date filed. A majority of the members of the board present shall determine matters presented to the board. All decisions and findings shall be reduced to writing by the secretary, with copies to the petitioner and all other parties to the hearing. Any interested person aggrieved by a decision of the board may appeal to the City Council, provided that written notice to the City Council for such appeal is delivered to the City Secretary within 10 days after the date that the written decision of the board is mailed to the appellant by the board secretary.

All appeals to the City Council are subject to the rules of the City Council, which are codified in Section 2-2 of the City Code, copies of which are available from the City Secretary. Parties wishing to preserve their right of appeal must comply with the rules of the City Council, including Rule 12.

112.4 Posting of agenda. The secretary of the board shall prepare and post an agenda for each meeting in the manner provided by Chapter 551 of the Texas Government Code.

113.1 Unlawful acts. It shall be unlawful for any person, firm or corporation to erect, construct, alter, extend, repair, move, remove, demolish or occupy any building, structure or equipment regulated by this code, or cause same to be done, in conflict with or in violation of any of the provisions of this code.

Where no specific penalty is otherwise provided in this code, the violation of any provision of this code shall constitute a misdemeanor punishable upon conviction by a fine of not less than $500 nor more than $2,000.00. Each day that any violation continues shall constitute and be punishable as a separate offense. Where any conduct in violation of this code also constitutes a violation of state penal law, then the offense shall be punishable as provided in the applicable state law. In prosecutions under this code, the various provisions hereof that are designated as an “exception” or "exceptions" shall not be treated as exceptions within the meaning of Section 2.02 of the Texas Penal Code, and, instead, they shall constitute defenses to prosecution within the meaning of Section 2.03 of the Texas Penal Code.

113.4 Violation penalties. Any person who violates a provision of this code or fails to comply with any of the requirements thereof or who erects, constructs, alters or repairs a building or structure in violation of the approved construction documents or directive of the building official, or of a permit or certificate issued under the provisions of this code, shall be subject to penalties as prescribed in Section 113.1.

114.2 Issuance. The stop work order shall be in writing and shall be given to the owner of the property involved, or to the owner's agent, or to the person doing the work. Upon issuance of a stop work order, the cited work shall immediately cease. The stop work order shall state the reason for the order, and the conditions under which the cited work will be permitted to resume.

At the time such a stop order is issued, the person doing the work and the permit holder shall be given notice of a right to a hearing on the matter pursuant to Section 116. The notice shall delivered to the persons performing the work if present at the site or otherwise shall be conspicuously posted at the site. Upon request, such a hearing shall be held within three business days unless the permit holder or person who was doing the work requests an extension of time. Any stop order that has been issued shall remain in effect pending any hearing that has been requested unless the stop order is withdrawn by the building official.

115.1 — DELETE IN ITS ENTIRETY.

115.2 — DELETE IN ITS ENTIRETY.

115.3 — DELETE IN ITS ENTIRETY.

115.4 — DELETE IN ITS ENTIRETY.

115.5 — DELETE IN ITS ENTIRETY.

115.1 Unsafe buildings or structures. All buildings or structures regulated by this code that are structurally unsafe or not provided with adequate egress, or that constitute a fire hazard, or are otherwise dangerous to human life are, for the purpose of this section, unsafe. Any use of buildings or structures constituting a hazard to safety, health or public welfare by reason of inadequate maintenance, dilapidation, obsolescence, fire hazard, disaster, damage or abandonment is, for the purpose of this section, an unsafe use. Parapet walls, cornices, spires, towers, tanks, statuary and other appendages or structural members that are supported by, attached to, or a part of a building and that are in deteriorated condition or otherwise unable to sustain the design loads that are specified in this code are hereby designated as unsafe building appendages.

All such unsafe buildings, structures or appendages shall be abated, repaired, rehabilitated, demolished or removed in accordance with the procedures set forth in Chapter 10, Articles VIII and IX of the City Code.

In matters of fire safety design and construction, including, but not limited to, egress (corridors, exit numbers, stairs, fire escapes and fire escape signs), wall and ceiling finish, enclosure of vertical shafts, basement access, standpipes and occupancy separation, a building shall not be deemed to be a fire hazard if it is in compliance with the most restrictive of:

1. The provisions of Appendix L, if applicable;
2. The building code that was applicable when the building was constructed; or
3. If the occupancy classification of the building or a portion thereof has changed since it was constructed, then the building code that was applicable when the occupancy classification was changed.

Any building not situated within the jurisdiction at the time of its construction or change of occupancy classification shall be governed by the design and construction code and related laws applicable in the

jurisdiction in which it was constructed at the time of its construction or change of occupancy and by the provisions of Appendix L to this code. To the extent of any conflict among the requirements of any of the foregoing codes that are applicable to any building, the most restrictive will apply. However, compliance with the aforesaid provisions shall not be deemed to excuse life-threatening defects of maintenance, sanitation, repair of casualty damage, security from unauthorized entry, structural stability, electrical systems, gas systems, plumbing systems, heating or cooling systems or other building systems.

Exception: For a building under construction or contract at the time of its annexation by the jurisdiction, see the Annexation Ordinance (Ordinance No. 78-2672), which is published in the preamble of this volume.

SECTION 116
HEARING PROCEDURES

116.1 Hearing notices. Whenever notice is to be given to any person concerning the right to a hearing, the notice may be given by personal delivery or by certified mail, return receipt requested.

If notice is being given to a building owner or to a tenant therein and the building official is unable to determine the name or address of such person after checking the building and the applicable records of the jurisdiction's Department of Public Works and Engineering, the County Appraisal District, the electrical utility company, the gas utility company, and the water utility provider, notice shall be mailed to the billing addresses of the building as shown on the records of the electrical company and the gas company and shall be posted on or in view of each entrance to the building. Additionally, if any notice is mailed to a building owner or a building tenant and is returned without delivery, notice shall be effective if posted on or in view of each entrance to the building.

116.2 Hearings. Except where otherwise specifically provided, all hearings held pursuant to this code shall be conducted by the Director of Planning and Development or a representative, who shall hereinafter be referred to as the "hearing official." The director shall not designate any person to be a hearing official under this code who has taken any part in the investigation of the matter that is the subject of the hearing or any person who directly supervised the investigation. The hearing official shall consider only the evidence presented at the hearing in rendering a decision. The decision of the hearing official shall be set forth in writing and shall be served on each party in the same manner as a notice of a right to a hearing.

SECTION 117
PERMIT AND INSPECTION FEES

117.1 General.

117.1.1 Permit or license. An administrative fee of $5.00 shall be charged upon the preparation of each permit or license issued by the building official. This fee shall apply regardless of whether the permit or license is issued pursuant to this code or the City Code, and it shall be payable in addition to all other applicable fees for the permit or license. The foregoing administrative fee shall not be applicable if no other fee is provided by law for the permit or license.

117.1.2 Receipt. An administrative fee of $5.00 shall be charged upon the preparation of each fee or deposit receipt issued by the building official. This fee shall apply regardless of whether the fee or deposit is payable pursuant to this code or the City Code. This fee shall be in addition to all other applicable fees or deposits. When paid for a deposit or fee receipt, this fee shall neither constitute nor be refundable as a part of the deposit.

117.1.3 Minimum permit fee. If the fee or fees imposed for any single permit that is issued by the building official, whether issued under this code or the City Code, do not total more than $12.00, then

a minimum permit fee of $12.00 shall be charged for the permit. The foregoing minimum permit fee shall not be applicable if no other fee is provided by law for the permit. The administrative fee assessed pursuant to Section 117.1.1 above shall not be included in the foregoing minimum permit fee calculation, and it shall be payable in addition to the minimum permit fee.

117.1.4 Certificate of occupancy or compliance. A fee of $50.00 shall be charged for each certificate of occupancy or compliance issued for a building or structure or portion thereof such as an individual business lease space. A fee of $35.00 shall be charged for each temporary certificate of occupancy issued.

117.1.5 Reinspection fee. In case it becomes necessary to make a reinspection of any work because of faulty materials or workmanship or incomplete work, the permittee shall pay a fee of $25 for each reinspection, except where a greater fee is specifically required under this code.

117.1.6 Specially requested inspections during working hours. Whenever a person requests that an inspector be present at a site at a specific time, the jurisdiction shall provide such inspector upon payment of all applicable fees if doing so would not interfere with the regular duties of the inspector and would not cause a delay in the inspection of other work.

Fee for specially requested inspections in addition to all other fees required by this code:

Per day, regular working hours $200.00

A full day's fee must be paid unless the building official finds that the request was made as a result of an unforeseeable emergency.

117.1.7 Emergency inspections. Emergency inspections shall be defined as those requested inspections occasioned by virtue of an unforeseeable incident or occurrence that necessitates an immediate inspection. In situations where there is a dispute as to whether an actual emergency occurred, the decision of the building official shall be final.

Fees:

Minimum four hours $150.00

Each hour or portion thereof exceeding four hours $25.00

Total not to exceed $200.00 if inspection is made during regular working hours. This fee shall be in addition to all other fees required by this code.

117.1.8 Inspections and plan reviews outside regular working hours. Whenever a person requests that an inspector make an inspection or a plan analyst review plans at times other than during regular working hours, or on jurisdiction-observed holidays or weekends, the building official shall provide such plan analyst or inspector upon payment of all applicable fees if such would not interfere with the regular duties of the plan analyst or inspector or create an undue burden on such plan analyst or inspector.

Fees:

Minimum four hours $240.00

Each hour or portion thereof exceeding four hours $35.00

This fee shall be in addition to all other fees required by this code.

117.1.9 Inspections outside of jurisdiction. The fee for an inspection outside the jurisdiction shall be a minimum of $200.00 per person plus $0.20 per vehicle mile. This fee shall not apply to inspections performed under Section 117.1.11.

117.1.10 Exemption from permits and fees. To the extent that the State of Texas and the United States of America are exempt as a matter of law from compliance with the Building Code, neither the State of Texas nor the United States of America shall be required to obtain a building permit for work undertaken for or performed by either of them; however, the fees set forth in this section shall be

applicable to the extent that the State of Texas or the United States of America elects to obtain any permit for exempt work.

Except for exempt work undertaken by or for the State of Texas or the United States of America, building permits shall be required for any political subdivision or unit of government (including, but not limited to, the jurisdiction) in the same manner and to the same extent as for work performed by or for other persons. The fees prescribed in this section shall be applicable to all permits issued to or for governmental agencies.

Counties are required to comply with the provisions of the Building Code. Except as provided by Section 212.903 of the Texas Local Government Code, a county shall notify the building official of each work project that is undertaken. The building official shall, upon request and demonstration of capacity, allow a county to self-permit and self-inspect work that is performed by or for the county on county-owned buildings and facilities for which a permit is required. No fee shall be imposed hereunder for work that a county is authorized to self-permit and self-inspect.

117.1.11 Approved fabricators/certifying agent or agency. The following permit fees shall apply to an approved fabricator/certifying agent or agency:

1. Approved certifying agent or agency, as described in Chapter 17: A fee of $450.00 if an inspection is made for the purpose of approving the agent or agency. The agent or agency shall reimburse the jurisdiction for travel expenses incurred in performing inspections outside Harris or a contiguous county.
2. Approved fabricator as defined in Chapter 2: A fee of $500.00 for each inspection made for the purpose of verifying and approving the fabricator's quality control program. The fabricator shall reimburse the jurisdiction for travel expenses incurred in performing inspections outside Harris or a contiguous county.

117.1.12 Commercial plan review fee. Plans submitted for a commercial building permit shall be charged a plan review fee. The fee shall be charged at a rate of 25 percent of the estimated building permit fee calculated as provided in section 117.2. This portion of the fee shall be paid upon submittal for the initial review of plans. The balance of the permit fee shall be collected when the permit is issued.

117.1.13 Express plan review service. Expedited review of plans for certain types of construction projects shall be available when approved by the building official. The building official shall develop guidelines for proper use of this service, determination of qualified projects, and assessment of service fees not specifically noted in this code.

The fee for expedited service shall be 65 percent of the building permit fee calculated as provided in Section 117.2. This fee shall be separate from, and in addition to, the structural permit fee.

If for any reason the building official is not able to complete the review of any set of plans for which the expedited review fee has been paid and approve or disapprove the same within seven days of their receipt (Saturdays, Sundays and jurisdiction-observed holidays excluded), then the applicant shall, upon written request therefor, be entitled to a refund of the expedited review fee.

Exception: Any processing delay for required plan review by other jurisdiction departments, not under control of the building official, shall not be charged to the seven-day review time.

Payment of the expedited review fee allows review of the plans in the form presented at the time the fee is paid and one additional review in the event the drawings must be corrected to comply with this code or other applicable laws. The payment shall not entitle the applicant to expedited review of any further revisions to the plans.

117.1.14 Name or Address Changes.

Name change, each $50.00

Address change, each $50.00

117.2 Structural.

117.2.1 Buildings. The following building permit fees shall be required by this code:

New buildings, additions, alterations, remodels, conversions, and repairs:

Where the valuation (rounded to the nearest dollar) is from:

$0.01 to $7,000 ..... $35.00

$7,001 to $150,000 ..... $35.00 for the first $7000
plus $4.00 for every additional $1,000 valuation, or fraction thereof

$150,001 to $200,000 ..... $607.00 for the first $150,000
plus $3.75 for every additional $1,000 valuation, or fraction thereof

$200,001 to $300,000 ..... $794.50 for the first $200,000
plus $3.50 for every additional $1,000 valuation, or fraction thereof

$300,001 to $500,000 ..... $1,144.50 for the first $300,000
plus $3.25 for every additional $1,000 valuation, or fraction thereof

$500,001 to $1,000,000 ..... $1,794.50 for the first $500,000
plus $3.00 for every additional $1,000 valuation, or fraction thereof

$1,000,001 to $5,000,000 ..... $3,294.50 for the first $1,000,000
plus $2.75 for every additional $1,000 valuation, or fraction thereof

$5,000,001 ~~and up~~ to $50,000,000 ..... $14,294.50 for the first $5,000,000
plus ~~$2.50~~ $1.50 for every additional $1,000 valuation, or fraction thereof

$50,000,001and up ..... $81,794.50 for the first $50,000,000
plus $1.00 for every additional $1,000 valuation, or fraction thereof

Notes:

1. New single family homes with a valuation of $115,000 or less shall receive a 50 percent discount on permit fees.
2. A historic building that has been designated by the jurisdiction as a landmark or that is located within a historic district designated by the jurisdiction, or for which designation as a landmark or part of a historic district is pending, shall receive a 50 percent discount on permit fees provided that a certificate of appropriateness approved by the Houston Archaeological and Historical Commission pursuant to Chapter 33 of the City Code is submitted with the construction documents.
3. Towers other than sign structures shall be charged in the same manner as new buildings, as set forth in Section 117.2.1.

Demolition of any building:

For the first story $60.00

For each additional story $30.00

Stationary and floating piers:

First 100 square feet of deck area $20.00

Each additional square foot $0.15

Towers, other than sign structures: 0.45 of 1% valuation, with a minimum fee of $35.00

Incinerators (other than domestic outdoor type), each $75.00

Bulkheads:

For first 100 lineal feet or part thereof $40.00

Each additional 100 lineal feet or part thereof $10.00

Dredging $100.00

Prefabricated fireplaces $15.00

Sand blasting or water blasting $35.00

Grading permit $35.00

Foundation only:

$0.05 per square foot of floor space or excavation for foundation, with a minimum fee of $35.00

Excavation permit (other than those covered by a building permit) $35.00

Loading docks (uncovered):

First 100 lineal feet or part thereof $35.00

Each additional lineal foot $0.08

Barricades:

First 100 lineal feet $55.00

Each additional 100 lineal feet or part thereof $15.00

Paint spray booth $35.00

Concrete slab, uncovered (other than those for which a building permit is required and minor incidental slabs): $0.05 per square foot, with a minimum fee of $30.00

Heliports and helistops (interdepartmental inspections--health, structure, fire and aviation safety) $700.00

Duplicate job card $20.00

117.2.2 Chemical plants. Permit fees for petroleum processing installations; nuclear reactor complexes and processing facilities; facilities manufacturing, processing, distributing or storing energy; other facilities processing, storing or manufacturing materials or energy, not otherwise covered by a construction permit: 0.45 of 1% of valuation, with minimum fee of $35.00

117.2.3 Occupancy and inspection. The following permit fees apply to occupancy and inspection of existing buildings:

1. A certificate of occupancy or a life safety compliance inspection and certificate(s) (for compliance with Appendix L; includes initial compliance inspection, final inspection and issuance of certificate; does not include fees for permits where work is required):

   First story $300.00

   Each additional story $100.00

   For residential multifamily buildings, per contiguous project:

   For one to thirty units $300.00

   Each additional unit $10.00

2. Duplicate life safety compliance certificate $35.00

3. Certificate name change only $50.00

4. Duplicate certificate of occupancy $35.00

5. Incinerator inspection $35.00

6. Revalidation inspection $25.00

7. Change of address request $50.00

8. Certificate of compliance–inspection for resale of existing house when such inspection has been requested by the owner $50.00

9. Certificate for individual retail or office spaces of less than 3,000 square feet in multi-tenant buildings:

If the certificate is requested in connection with and the inspection is performed at the same time as the inspection of the building core $35.00

Otherwise $125.00

117.2.4 Fences. Permit fees for fences shall be as follows:

For the first 100 lineal feet or part thereof $55.00

For each additional 100 lineal feet or part thereof $7.00

117.2.5 Fire escapes. Permit fees for fire escapes shall be as follows:

For each fire escape four stories or less in height $30.00

For each additional story in height $15.00

117.2.6 Sidewalks, driveways, culverts, curbs and gutters. Permit fees for sidewalks, driveways, culverts, curbs and gutters covered by this code shall be as follows:

Sidewalks:

For the first 100 lineal feet or part thereof $30.00

For each additional 100 lineal feet or part thereof $7.00

Driveways $30.00

Culvert pipes (not used for driveways):

For the first 100 lineal feet or part thereof $30.00

For each additional 100 lineal feet or part thereof $7.00

Curb and Gutter:

For the first 100 lineal feet or part thereof $30.00

For each additional 100 lineal feet or part thereof $7.00

117.2.7 Parking lots and paved areas. Permit fees for parking lots (uncovered) and paved areas shall be as follows:

For the first 1,000 square feet or part thereof $35.00

For each additional 1,000 square feet or part thereof $1.50

117.2.8 Plan review fees. Plan review fees shall be as follows:

Manufactured home parks:

15 spaces or less $35.00

Each additional space $1.50

Prefabricated buildings or modular buildings, $0.05 per square foot, with a minimum fee of $35.00

Reexamination of plans:

Where previously approved plans are reexamined, the plan review fee shall be $35.00, or 15 percent of the permit fee, whichever is greater. The fee for reexamination of partial plans shall be determined by the building official based on the review time involved.

Outside jurisdiction plan review fee:

Plan review for buildings located outside the jurisdiction shall be 65 percent of the building permit fee as calculated in Section 117.2. This service shall only be provided at the building owner's request and subject to the availability of personnel to render the service.

117.3 HVAC Equipment.

117.3.1 General. Fees for permits and inspections for the installation, alteration and inspection of heating, ventilating, air-conditioning and refrigeration systems shall be as follows:

1. Ventilating systems or heating-only systems (other than boilers): 1.15 percent of valuation, plus $15.00. Toilet exhaust, outside air makeup, elevator ventilation, stair pressurization, smoke exhaust or residential ventilation fees shall be included in the air-conditioning tonnage fee. The minimum permit fee shall be $25.00. (See Section 117.3.3 for local vent fees.)
2. Repairs or alterations (including cooling tower replacement) to an existing heating, ventilating, air-conditioning or refrigeration system: 1.15 percent of the valuation, plus $25.00.

   Exception: Ducts and grilles in a lease space, where total valuation is less than $500.00: $30.00 for each lease space.
3. Air-handling and duct systems for air-conditioning in buildings that have heating and/or cooling fluid from an external source: $3.00 per ton [based on 400 cubic feet per minute (cfm) capacity per ton], plus $25.00.
4. Air-conditioning cooling equipment (chillers, compressors and/or absorption units with their auxiliaries) located in a building other than the one being cooled (for instance, a central plant to supply one or more buildings): $3.00 per ton (either new tonnage, added tonnage or standby tonnage), plus $25.00.
5. A complete air-conditioning system where the cooling equipment, the air-handling equipment and duct system are in the same building: $6.00 per ton of refrigeration or horsepower, whichever is greater, plus $25.00. For air-conditioning systems that include heating (except boilers), the fee shall be included in the tonnage or horsepower fee at no extra cost, provided such heating is included on the original permit application.
6. Commercial, manufacturing and industrial process refrigeration systems: $6.00 per ton of refrigeration or horsepower, whichever is greater, plus $25.00.

117.3.2 Temporary operation inspection. For inspection of a heating, ventilation, refrigeration or air-conditioning system to be used on a temporary basis, a fee of $30.00 shall be paid to the jurisdiction by a licensed air-conditioning contractor requesting such inspection. If the system is not approved for temporary operation on the first inspection, the usual reinspection fee will be charged for each subsequent inspection for such purpose.

117.3.3 Local vent permit. A fee of $25.00 will be charged for local vent permits, central vacuum system permits and permits for ventilation fans up to 2,000 cfm. When a licensed air-conditioning contractor includes local vents in a permit, no additional fee will be required.

117.3.4 Self-contained air-conditioning units. Except for Group R, Division 3 occupancies, buildings using self-contained air-conditioning units: $6.00 per ton or horsepower of all units combined, plus $25.00.

117.3.5 Manufactured home inspections. For a manufactured home inspection of heating and ductwork where no state inspection has been made: $25.00.

117.3.6 Certificate of approval. A fee of $20.00 in addition to the regular permit fee shall be charged for a certificate of approval of air-conditioning for each permit taken out to add heating and/or air-conditioning to an existing residence. This $20.00 fee shall be paid for at the time the regular permit fee is paid.

117.4 Boilers. Every person desiring to install, maintain or repair boilers shall file an application for a permit with the building official, stating the location and nature of work to be performed, and pay the following fees:

1. For boiler installation based on Btu input and/or HP: $25.00 plus $3.00 for each BHP or part thereof. The permit for installation of a single boiler in excess of 1,200 BHP shall not exceed $3,000.00.

   Note: For the purpose of this code, 1 BHP equals 33,000 Btu.

2. Annual fee: $30.00 for each boiler.
3. Repair permit: 1.15% of valuation of repairs to be made, plus $25.00

117.5 Plumbing.

117.5.1 General. Following is a schedule of fees required for permits, with a minimum fee of $12.00, where not otherwise specified:

Opening in street (street cut, for purpose of connection with utilities) $85.00

(See Chapter 40, City Code, for additional regulations and deposits required.)

Temporary gas inspection $25.00

Gas permit and inspection (up to 3 openings) $12.00

Additional gas openings, each $3.00

Manufactured home inspection fee (where no state inspection has been made) $25.00

Fire-protection fee (fire sprinkler system, separate permit required):

For a fire sprinkler system (any head or group of heads up to 25 that is regulated with a valve for any portion of a building), minimum fee $75.00

For each additional head $2.00

Standpipe system (1 to 25 hose connections) $50.00

Each additional hose connection $2.00

117.5.2 Heating gas appliances.

Furnace (nonduct type) $12.00

Each additional furnace to be installed in same building under same permit $6.00

Floor furnace (nonduct type) $30.00

Incinerators (gas fired) (complete with two burners or more) $60.00

Infrared heaters (one or two) $12.00

Each additional infrared heater installed under the same permit $6.00

117.5.3 Yard lights or barbecue grills.

First opening $12.00

Each additional opening installed under same permit $6.00

117.5.4 Permanent appliances.

Wall heater (bath heaters exempt) $12.00

Each additional heater installed under same permit $6.00

Gas steam radiator $30.00

Each additional radiator installed under same permit $6.00

Commercial oven $40.00

Commercial dryer $30.00

Plumbing fixtures (one or two) $12.00

Each additional fixture installed under same permit $6.00

Warm-air circulators (nonduct), first three $30.00

Each additional to be installed under same permit $6.00

Tie to curb inlet-storm sewer $60.00

Manholes, each $60.00

Roof drain or outside downspout connection to drainage system, one or two $12.00

Each additional roof drain or downspout to be installed under the same permit $6.00

Catch basin or outside area drain, one or two $12.00

Each additional catch basin or outside area drain to be installed under same permit ... $6.00

Sewer connections, each $35.00

Ground in plumbing for shell building, 3,000 square feet or less floor area $30.00

For each additional 1,000 square feet or part thereof $10.00

Septic tanks or individual sewage treatment plants, each $30.00

Disconnect and plug main sewer connection $30.00

Tanks (not septic tanks). A permit separate from other permits required:

Tanks through 1,000 gallons capacity (including mechanical interceptors) $30.00

1,001 through 6,000 gallons $45.00

6,001 through 15,000 gallons $70.00

15,001 through 30,000 gallons $115.00

Over 30,000 gallons $170.00

117.6 Electrical. The following is a schedule of the permit and inspection fees as required by the Electrical Code, with a minimum fee of $12.00, where not otherwise specified:

117.6.1 Services.

Meter loop and service

Up to and including 50 kW $12.00

51 kW through 250 kW $20.00

Over 250 kW $30.00

Panels with eight or more circuits, each $5.00

Outlets, each $0.35

Note: All light switches and receptacle openings and bell-ringing transformers are classified as outlets.

117.6.2 Fixtures and Appliances.

Fixtures, each $0.35

Note: Any current-consuming device permanently attached to an outlet for illumination purposes shall be classified as a fixture.

Electrical appliances-domestic

Range receptacle, each $2.25

Clothes dryer, each $2.25

Stove top, each $2.25

Oven, each $2.25

Garbage disposal, each $2.25

Dishwasher, each $2.25

Window air-conditioner receptacle, each $2.25

117.6.3 Motors.

Motors, permanently installed, each

Up to and including 1 horsepower $1.50

Over 1 horsepower through 10 horsepower $6.00

Over 10 horsepower, ... $5.00

plus $0.30 per each additional horsepower

Motor control equipment is included in the motor fees. Outlets for future motor installation shall be charged for at one-half of the regular motor rates applying. The other one-half shall be paid at the time the motors are installed.

Permanent connections of electrical appliances, equipment and transformers of any nature:

Unless another fee is specified in this section for the apparatus to be installed, the fee shall be based on the kW rating of the apparatus. Each kW shall be considered to be one horsepower, and the fees shall be the same as indicated for "motors, permanently installed", above.

117.6.4 Signs.

Shop inspection of incandescent electrical signs and gas or vacuum tube signs, each:

0 to 5 kVA $30.00

Additional for each kVA or fraction thereof exceeding 5 kVA $5.00

Installation inspection of incandescent electrical signs and gas or vacuum tube signs, each:

0 to 5 kVA $30.00

Additional for each kVA or fraction thereof exceeding 5 kVA $5.00

117.6.5 Outdoor and Temporary.

Streamers and festoon lighting per circuit, each $6.00

Ball park and parking lot light poles (no outlet or fixture charge), each $30.00

Temporary installations, such as wood saws, floor surfacing machines, painting/spraying apparatus and the like, per installation $15.00

Temporary installation of commercial sound equipment $20.00

Temporary lighting installations $15.00

Temporary installations such as carnivals or similar installations for amusement show display or similar uses shall be charged for on a kVA basis. For the purpose of this classification 1 horsepower of motor load shall be considered as one kVA.

0 through 10 kVA $20.00

Additional for each kVA or fraction exceeding 10 kVA $1.00

Temporary saw poles (per installation) $20.00

Temporary cut-in made permanent $30.00

Additions to existing work shall be charged for at the same rate as new work.

Reconnection fee $20.00

117.7 Elevators.

117.7.1 General. Every person proposing to install an elevator, dumbwaiter, escalator, manlift, moving walk, inclined stairway chairlift, personnel hoist or wheelchair lift shall file a written request for a construction permit with the building official and pay the following installation fees for each unit:

New installations and alterations:

Passenger or freight elevator, escalator, manlift, moving walk, inclined stairway chairlift, personnel hoist or wheelchair lift, where the equipment is to be installed in other than a private residence, each:

Up to and including $40,000 of valuation $55.00

For each additional $1,000.00 of valuation or fraction thereof $1.00

Personnel hoist-manufacturing design permit $500.00

(required in addition to above fee if the hoist is not already permitted)

Same equipment if installed in a private residence, each:

Up to and including $10,000.00 of valuation $15.00

For each additional $1,000.00 of valuation or fraction thereof $1.00

Installation fees for equipment other than personnel hoists include an operating permit for the first year of operation, where applicable.

Installation fees for personnel hoists include a limited permit for the first 90 days of operation.

117.7.2 Inspections. The building official shall not be obliged to perform the test or inspection if the building official does not then have qualified personnel to perform it. If the jurisdiction provides the inspections, fees shall be payable to the building official as follows:

1. Each personnel hoist:

Acceptance load test[#] (includes two monthly inspections) $150.00

Periodic test, three months (includes two monthly inspections) $75.00

Addition to tower plus any test fee, single-cage hoist $50.00

Addition to tower plus any test fee, twin-cage hoist $75.00

[#] Load test shall be performed by an elevator maintenance/installation company and the test shall be witnessed by the building official or an approved agency.

2. Acceptance inspection for each elevator (new installation and alteration) $300.00

3. Acceptance inspection for each escalator, dumbwaiter, wheelchair lift, manlift or moving walk (new installation or alteration) $150.00

4. Annual inspection for each elevator except where lesser fee is provided below $125.00

Reinspection fee $50.00

5. Escalator annual inspection, each $125.00

6. Moving walk annual inspection, each $125.00

7. Wheelchair lift annual inspection, each $125.00

8. Dumbwaiter annual inspection, each dumbwaiter:

For 2 through 10 landings $100.00

For each additional landing $5.00

9. Manlift or inclined stairway chairlift annual inspection, each $125.00

10. Traction elevator maintenance load test[#]

Five-year maintenance load test $250.00

Counter-weight safeties, add $75.00

With reduced stroke buffer, add $20.00

With spring buffer, add $125.00

11. Hydraulic elevator three-year load test[#] $125.00

12. Reschedule of test:

Additional fee if owner or elevator company cancels, unless notice is given to the building official by at least 1:00 p.m. on the preceding working day $100.00

13. If an elevator test cannot be completed within eight hours because the elevator did not comply with the requirements of this code when the test was begun, there shall be an additional fee of $50.00 for each additional hour or portion thereof.

117.7.3 Reinspection fee. In the event it becomes necessary to make a reinspection of any work or equipment due to deficiencies in order to issue an approved inspection report, the applicant shall pay to the building official for each reinspection a fee of $50.00.

117.7.4 Operating permit or limited permit. An operating permit or limited permit shall be required for each elevator, dumbwaiter, escalator, manlift, moving walk, inclined stairway chairlift, personnel hoist or wheelchair lift. An operating permit shall be valid for one year, and a limited permit shall be valid for 90 days. The fees for operating permits and limited permits shall be:

Each elevator $30.00

Each escalator or moving walk $20.00

Each dumbwaiter $12.00

Each personnel hoist $25.00

Each wheelchair lift $20.00

[#] Load test shall be performed by an elevator maintenance/installation company and the test shall be witnessed by the building official or an approved agency.

Each manlift $15.00

Each inclined stairway chairlift $15.00

Each escalator or moving walk unit powered by one motor shall be considered as a separate unit.

117.8 Signs. Fees for all signs covered by the Sign Code shall be as follows:

1. **Site inspections** $60.00
2. **Reinspection fee:**

   Site, hole and electrical $25.00
3. **Construction or reconstruction permit**

   For the first 50 square feet of one sign face or fraction thereof $45.00

   Each square foot or fraction thereof of one sign face exceeding 50 square feet $0.33
4. **Operating permit--on-premises signs:**

   For the first 50 square feet of sign face or fraction thereof $15.00

   Each square foot of sign face or fraction thereof exceeding 50 square feet $0.27
5. **Operating permit.** Off-premises signs that advertise the sale or rental of real property or direct persons to the location of real property for sale or rent, which signs are limited to 40 square feet in sign face area for a nonrenewable three-year permit as authorized in Section 4612 (b) of the Sign Code $100.00
6. **Operating permit.** Off-premises signs other than as provided above $40.00
7. **Replacement of lost or damaged operating tag** $25.00
8. **Plan examination fee** $25.00
9. **Plan reexamination due to alteration of approved plan** $25.00

   In addition to the above fees, the fees required by Section 117.1.1 shall be paid. Fees for signs requiring electrical permits shall be paid as set out in Section 117.6.

117.9 Medical gas permits.

$3.00 per each gas outlet, with a minimum fee of $30.00

117.10 Alarms, detectors, central station security and testing. Fees for alarms, detectors, central station security and testing shall be as follows:

1. Smoke- or heat-actuated detectors-1 to 10 ..... $30.00

   Each additional detector $2.00
2. Each emergency central alarm system/station $25.00
3. Emergency public address system-1 to 9 floors $40.00

   Each additional floor $4.00
4. Security system, minimum $25.00

   Each floor in excess of two $10.00
5. Retest entire emergency system $75.00
6. Retest any single-type system $25.00

SECTION 118
PRIVATE PLAN REVIEW AND INSPECTION SERVICES

118.1. Applicability. The application of this section is limited to those Group R, Division 3 occupancy structures that constitute dwellings within the definitions of this Code and to those Group U occupancies, such as garages, carports, fences and other structures that are associated with dwellings.

118.2. Scope. This section applies to any permit required under this Code, the Electrical Code, Plumbing Code, or the Mechanical Code for the construction, repair, or renovation of a structure to which this section applies.

118.3. Program established. The building official may establish a private plan review and inspection program under which qualified persons who are not city employees may review plans, conduct certain building inspections, and provide related services for structures to which this section applies to assure compliance with all applicable construction codes. The program shall be conducted in accordance with the regulations and forms promulgated by the building official, which shall, without limitation, address the following:

1. Qualifications of the firms and individuals authorized to perform plan reviews, conduct inspections, and provide other related permit services. The qualifications shall include licensing in accordance with any applicable laws and regulations and certification in accordance with state or federally recognized standards.
2. Requirement of appropriate liability coverages in an amount of not less than $1,000,000, per occurrence, with indemnity agreements and coverage of the jurisdiction, as an additional insured, for the protection of the jurisdiction and other persons who may be affected by the performance of the any services under the program.
3. Provisions to ensure that the firms and individuals participating in the program will act independently of building owners, contractors, and others so as to avoid conflicts of interest.
4. Provisions for any non building code related review of plans and issuance of permits to applicants who utilize plan review, inspection, and other related services under the program.
5. Provisions regarding the keeping of records and filing of reports with the building official.
6. Administrative provisions for the acceptance, suspension, and revocation of the right of a firm or individual to participate in the program, which shall include elements of due process, including a right of appeal to a hearing officer designated by the director of public works and engineering, whose decision, notwithstanding any other provision of this Code, shall be final and not appealable to the General Appeals Board or City Council.
7. Provisions to ensure that no firm or individual may be certified to participate in the program unless qualified to conduct plan reviews and inspections under the Codes currently enforced by the jurisdiction and/or a nationally recognized uniform or international code.
8. Provisions relating to fees charged by any firm or individual for services rendered under the program, including any fees required by law to be paid directly to the jurisdiction and remitted by the building official to a firm or individual.
9. Provisions prohibiting any private developer, builder, or contractor from employing any firm or individual, including subcontractors, to perform more than 25% of that developer's, builder's or contractor's services under the program in any one calendar year unless a greater amount is approved by the building official.
10. Provisions requiring any private developer, builder or contractor utilizing any services under the program and the building official to file a report as set forth below:
    a. Each private developer, builder or contractor utilizing any services under the program shall file a report with the building official, supported by affidavit, containing the following information:
        (1) The total number of permits received during the preceding calendar year for the construction of any residential structure in connection with which services under the program were rendered;
        (2) The name of each firm or individual utilized under the program on each residential structure during the reporting period; and
        (3) A statement certifying that the developer, builder or contractor has fully complied with all rules and regulations under the program during the reporting period, including but not limited to, all rules governing the maximum number of plan reviews and inspections

permitted to be performed by any firm or individual, including subcontractors, rendering any services under the program.

The report shall be filed with the building official not later than the last day of January and July in each calendar year and shall cover the preceding 6 month period ending on the last day of December and June, respectively, in each year.

b. The building official shall file a report with the Mayor and City Council containing the following information:

(1) A listing of the names of all companies or contractors that utilized individuals or firms for services under the program and the name of each firm or individual so utilized;

(2) Names of all firms and individuals approved to perform services under the program;

(3) Total number of plan reviews and inspections performed by firms and individuals for each private developer, builder or contractor operating under the program;

(4) Number of plan rechecks and oversight inspections conducted by the jurisdiction for each firm or individual utilized under the program and the percentage of that firm or individual's work, including subcontractors, so inspected;

(5) The number of Code violations found through plan rechecks and oversight inspections, including the name of the firm or individual, including subcontractors, who performed such services;

(6) A list of any firms or individuals removed from the program by the building official; and

(7) An assessment of program effectiveness as demonstrated by available data, including comments and complaints received by the jurisdiction regarding the program pertaining to work performed by a participating developer, builder or contractor, or any firm or individual, including subcontractors, providing private plan review or inspection services under the program.

The building official's report shall be filed with the Mayor and City Council not later than the last day of August and February in each calendar year and shall cover the preceding 6 month period ending on the last day of July and January, respectively, in each year and may include such additional information relating to the program as he may deem appropriate.

11. Provisions prohibiting any private plan reviewer or inspector from being related to building owners, contractors, and other similarly situated individuals or entities within the third degree of consanguinity or within the second degree of affinity.

118.4. Oversight inspections. The provisions of this section do not affect the jurisdiction of the building official over any work or preclude oversight inspections by the building official of structures that are subject to the provision of services under the program. For purposes of quality assurance, the building official shall be authorized to recheck plans, perform inspections or reinspections, issue stop work orders, and take any and all actions that are authorized to be taken under this Code, the Electrical Code, the Plumbing Code, or the Mechanical Code. No prior notice need be provided to any program firm or individual, contractor, or owner, unless otherwise required by law.

118.5. Fees. To cover administrative costs, including registration of firms and individuals, management of the program, and oversight inspections, the building official shall assess fees equal to 25 percent of the amount otherwise payable under this Code for any permit, but not less than the minimum fee as required in Section 117. In addition to the reduced permit fees charged in connection with the program, an additional fee of $10 per payment voucher issued shall be assessed to cover the jurisdiction's costs in connection with any fee required to be paid to and remitted by the jurisdiction. If any contractor or owner requests an inspection by the building official of any structure that is subject to private inspection under this section, then the building official may perform the same for a fee of $75. The administrative fee that is payable under Section 117.1.2 shall be collected in addition to the fees otherwise provided under this section.

CHAPTER 2
DEFINITIONS

201.3 Terms defined in other codes. Where terms are not defined in this code and are defined in the ~~*International Fuel Gas Code, International*~~ *City of Houston Electrical Code*, ~~*International*~~ *City of Houston Fire Code*, ~~*International*~~ *City of Houston Mechanical Code* or ~~*International*~~ *City of Houston Plumbing Code,* such terms shall have the meanings ascribed to them as in those codes.

SECTION 202*
DEFINITIONS

(A)
~~**ACCESSIBLE.** See Section 1102.1.~~

~~**ACCESSIBLE ROUTE.** See Section 1102.1.~~

~~**ACCESSIBLE UNIT.** See Section 1102.~~

APPROVED. Acceptable to the ~~building official~~ code official or authority having jurisdiction.

(B)
BASEMENT. ~~That portion of a building that is partly or completely below grade (s~~ See ~~"Story above grade plane" and~~ Section~~s~~ 502.1~~and 1612.2)~~.

BUILDING OFFICIAL. The ~~officer or other designated authority charged with the administration and enforcement of this code~~ jurisdiction's Director of Public Works and Engineering, or a duly authorized representative or representatives.

(C)
~~**CIRCULATION PATH.** See Section 1102.1~~

CITY CODE. *The Code of Ordinances, Houston, Texas*.

(D)
DANGEROUS BUILDING CODE. The ordinances of this jurisdiction relating to abatement of dangerous buildings.

DAY BOX. See Section 307.2.1

~~**DWELLING UNIT OR SLEEPING UNIT, MULTI-STORY.** See Section 1102.~~

~~**DWELLING UNIT OR SLEEPING UNIT, TYPE A.** See Section 1102.~~

~~**DWELLING UNIT OR SLEEPING UNIT, TYPE B.** See Section 1102.~~

(E)
ELECTRICAL CODE. *The National Electrical Code* promulgated by the National Fire Protection Association, as adopted by this jurisdiction, and the *City of Houston Electrical Code.* See Section 101.4.1.

~~**EMPLOYEE WORK AREA.** See Section 1102.1~~

EXISTING STRUCTURE. A structure erected prior to the date of adoption of ~~the appropriate~~ this code, or one for which a legal building permit has been issued.

(F)
FAMILY. See Section 310.2.

FIRE CODE. *The City of Houston Fire Code*, as adopted by this jurisdiction. See Section 101.4.6.

FIRE MARSHAL. The fire marshal of this jurisdiction or such other person as the fire chief of this jurisdiction may designate.

~~**FLAME RESISTANCE.** See Section 802.1~~

(I)
ICC ELECTRICAL CODE. *The National Electrical Code* promulgated by the National Fire Protection Association, as adopted by this jurisdiction, and the *Electrical Code of the City of Houston*. See Section 101.4.1.

~~**INTENDED TO BE OCCUPIED AS A RESIDENCE.** See Section 1102.~~

INTERNATIONAL ENERGY CONSERVATION CODE. *The International Energy Conservation Code* as adopted by the State of Texas by this jurisdiction. See Section 101.4.7.

INTERNATIONAL FIRE CODE. *The City of Houston Fire Code*, as adopted by this jurisdiction. See Section 101.4.6.

INTERNATIONAL FUEL GAS CODE. *The City of Houston Plumbing Code*, as adopted by this jurisdiction. See Section 101.4.2.

INTERNATIONAL MECHANICAL CODE. *The City of Houston Mechanical Code* as adopted by this jurisdiction. See Section 101.4.3.

INTERNATIONAL PLUMBING CODE. *The City of Houston Plumbing Code*, as adopted by this jurisdiction. See Section 101.4.4.

INTERNATIONAL RESIDENTIAL CODE. *The International Residential Code* as adopted by the State of Texas and amended by this jurisdiction. See Section 101.2.

(L)
LOT LINE. A line dividing one ~~lot~~ portion or parcel of land considered as a unit from another, or from a street or any public place, sometimes referred to as a property line.

(M)
MECHANICAL CODE. *The City of Houston Mechanical Code*, as adopted by this jurisdiction. See Section 101.4.3.

~~**MULTILEVEL ASSEMBLY SEATING.** See Section 1102.1.~~

(P)
PLUMBING CODE. *The City of Houston Plumbing Code*, as adopted by this jurisdiction. See Section 101.4.4.

~~**PUBLIC ENTRANCE.** See Section 1102.1.~~

~~**PUBLIC-USE AREAS.** See Section 1102.1.~~

(R)

RELIGIOUS WORSHIP PLACE. A building or portion thereof intended for the performance of religious services.

~~**RESTRICTED ENTRANCE.** See Section 1102.1.~~
(S)
~~**SERVICE ENTRANCE.** See Section 1102.1.~~

SIGN CODE. Chapter 46 of this code.

~~**SITE.** See Section 1102.1.~~

[F] STANDPIPE, TYPES OF. See Section 902.1.
~~**Automatic dry.** See Section 902.1.~~
Automatic wet. See Section 902.1.
~~**Manual dry.** See Section 902.1.~~
~~**Manual wet.** See Section 902.1.~~
~~**Semiautomatic dry.** See Section 902.1.~~

STORY. That portion of a building included between the upper surface of a floor and the upper surface of the floor or roof next above (also see ~~"Basement,"~~ "Mezzanine" and Section 502.1). It is measured as the vertical distance from top to top of two successive tiers of beams or finished floor surfaces and, for the topmost story, from the top of the floor finish to the top of the ceiling joists or, where there is not a ceiling, to the top of the roof rafters.

STORY ABOVE GRADE PLANE. Any story having its finished floor surface entirely above grade plane, except that a basement shall be considered as a story above grade plane where the finished surface of the floor above the basement is:

1. More than 6 feet (1829 mm) above grade plane;
2. ~~More than 6 feet (1829 mm) above the finished ground level for more than 50 percent of the total building perimeter; or~~
3. ~~3~~ 2. More than 12 feet (3658 mm) above the finished ground level at any point.

(T)
THROUGH- PENETRATION FIRESTOP SYSTEM. ~~See Section 702.1.~~ A material, device or construction installed to resist, for a prescribed time period, the passage of flame, heat and hot gases through openings that penetrate the entire fire-resistive assembly in order to accommodate cables, cable trays, conduit, tubing, pipes or similar items.

TRANSIT SHED. A covered structure erected on a wharf or quay for the temporary storage of goods in transit between ship and land carrier or warehouse.

TOWER STRUCTURE. A structure other than a building as defined previously in this chapter that has a height normally greater than its largest horizontal dimension. Examples of tower structures include antenna supports, chimneys, tank supports, sign supports, equipment supports and other structures as determined by the building official.

TOWNHOUSE. A single-family dwelling unit constructed in a group of three or more attached units in which each unit extends from the foundation to roof and with open space on at least two sides, where units are separated by a property line.

(W)

WALL, LOAD-BEARING. Any wall meeting either of the following classifications:

1. Any metal or wood stud wall that supports more than 100 pounds per linear foot (1459 N/m) of vertical load in addition to its own weight.
2. Any masonry or concrete wall that supports more than 200 pounds per linear foot (2919 N/m) of vertical load in addition to its own weight.

WALL, NONLOAD-BEARING. Any wall that is not a load-bearing wall.

~~**WHEELCHAIR SPACE.** See Section 1102.1.~~

***NOTE: ALL OTHER PORTIONS OF SECTION 202 TO REMAIN AS SET FORTH IN THE 2003 INTERNATIONAL BUILDING CODE.**

CHAPTER 3
USE AND OCCUPANCY CLASSIFICATION

302.1 General. Structures or portions of structures shall be classified with respect to occupancy in one or more of the groups listed below. A room or space that is intended to be occupied at different times for different purposes shall comply with all the requirements that are applicable to each of the purposes for which the room or space will be occupied. Structures with multiple occupancies or uses shall comply with ~~be classified according to~~ Section 302.3. Where a structure is proposed for a purpose which is not specifically provided for in this code, such structure shall be classified in the group which the occupancy most nearly resembles, according to the fire safety and relative hazard involved.

1. Assembly (see Section 303): Groups A-1, A-2, A-3, A-4 and A-5
2. Business (see Section 304): Group B
3. Educational (see Section 305): Group E
4. Factory and Industrial (see Section 306): Groups F-1 and F-2
5. High Hazard (see Section 307): Groups H-1, H-2, H-3, H-4 and H-5
6. Institutional (see Section 308): Groups I-1, I-2, I-3 and I-4
7. Mercantile (see Section 309): Group M
8. Residential (see Section 310): Groups R-1, R-2, R-3 as applicable in Section 101.2, and R-4
9. Storage (see Section 311): Groups S-1 and S-2
10. Utility and Miscellaneous (see Section 312): Group U

TABLE 302.1.1
INCIDENTAL USE AREAS

ROOM OR AREA	SEPARATION AND/OR PROTECTION[a]
~~Furnace room where any piece of equipment is over 400,000 Btu per hour input~~	~~1 hour or provide automatic fire-extinguishing system.~~
~~Rooms with any~~ boilers where the largest piece of equipment is over 15 psi and 10 horsepower	1 hour or provide automatic fire-extinguishing system
Refrigerant machinery rooms	1 hour or provide automatic sprinkler system
Parking garage (Section 406.2)	2 hours; or 1 hour and provide automatic fire-extinguishing system
Hydrogen cut-off rooms, not classified as Group H.	1 hour ~~fire barriers and floor/ceiling assemblies~~ in Group B, F, H, M, S and U occupancies. 2 hours ~~fire barriers and floor/ceiling assemblies~~ in Group A, E, I and R occupancies.
Incinerator rooms	2 hours and automatic sprinkler system
Paint shops, not classified as a Group H, located in occupancies other than Group F	2 hours; or 1 hour and provide automatic fire-extinguishing system
Laboratories and vocational shops, not classified as Group H, located in Group E or I-2 occupancies	1 hour or provide automatic fire-extinguishing system
Laundry rooms over 100 square feet	1 hour or provide automatic fire-extinguishing system

Storage rooms over 100 square feet	1 hour or provide automatic fire-extinguishing system
Group I-3 cells equipped with padded surfaces	1 hour
I-2 waste and linen collection rooms	1 hour
Waste and linen collection rooms over 100 square feet	1 hour or provide automatic fire-extinguishing system
Stationary lead-acid battery systems having a liquid capacity of more than 100 gallons used for facility standby power, emergency power or uninterrupted power supplies	1 hour ~~fire barriers and floor-ceiling assemblies~~ in Group B, F, M, H, M, S and U occupancies. 2 hours ~~fire barriers and floor-ceiling assemblies~~ in Group A, E, I and R occupancies

For SI: 1 square foot = 0.0929 m², 1 pound per square inch = 6.9 kPa, 1 British thermal unit per hour = 02.93 watts, 1 horsepower = 746 watts, 1 gallon = 3.785 L.

~~a. Where an automatic fire-extinguishing system is provided, it need only be provided in the incidental use room or area.~~

302.1.1 Incidental use areas. Spaces which are incidental to the main occupancy shall be separated or protected, or both, in accordance with Table 302.1.1 or the building shall be classified as a mixed occupancy and comply with Section 302.3.2. Areas that are incidental to the main occupancy shall be classified in accordance with the main occupancy of the portion of the building in which the incidental use area is located.

Exception: Incidental use areas within and serving a dwelling unit are not required to comply with this section.

302.1.1.1 Separation. Where Table 302.1.1 requires a fire-resistance-rated separation, the incidental use area shall be separated from the remainder of the building with a fire barrier. Where Table 302.1.1 permits an automatic fire-extinguishing system without a fire barrier, the incidental use area shall be separated by construction capable of resisting the passage of smoke. The partitions shall extend from the floor to the underside of the fire-resistance-rated floor/ceiling assembly or fire-resistance-rated roof/ceiling assembly above or to the underside of the floor or roof sheathing, deck or slab above. Doors shall be self-closing or automatic-closing upon detection of smoke. Doors shall not have air transfer openings and shall not be undercut in excess of the clearance permitted in accordance with NFPA 80.

302.1.1.2 Protection. Where an automatic fire-extinguishing system or an automatic sprinkler system is provided in accordance with Table 302.1.1, only the incidental use areas need be equipped with such a system.

302.2 Accessory use areas. Accessory use areas must be ancillary to the principal purpose for which the structure or portion thereof is occupied. A fire barrier shall be required to separate accessory use areas classified as Group H in accordance with Section 302.3.2, and incidental use areas in accordance with Section 302.1.1. Any other accessory use area shall not be required to be separated by a fire barrier provided the accessory use area occupies an area not more than 10 percent of the area of the story in which it is located and does not exceed the tabular values in Table 503, without height and area increases in accordance with Section 504 and 506, for the allowable height or area for such use.

Exceptions:

1. Accessory assembly areas are not considered separate occupancies if the floor area is equal to or less than 750 square feet (69.7 m^2).

2. Portions of Group E occupancies occupied for assembly purposes are not considered separate occupancies.

3. Accessory religious education rooms and religious auditoriums with occupant loads of less than 100 are not considered separate occupancies.

302.2.1 — DELETE IN ITS ENTIRETY.

302.3.1 Nonseparated uses. Each portion of the building shall be individually classified as to ~~use~~ occupancy. The required type of construction for the building shall be determined by applying the height and area limitations for each of the applicable occupancies to the entire building. The most restrictive type of construction, so determined by each of the occupancies within the building, shall apply to the entire building. All other code requirements shall apply to each portion of the building based on the use or occupancy of that space except that the most restrictive applicable provisions of Section 403 and Chapter 9 shall apply to ~~these nonseparated uses~~ the entire building. Fire-resistance rated walls or floors ~~separations are~~ shall not be required between different occupancies ~~uses~~, except as required by other provisions.

302.3.2 Separated occupancies ~~uses~~. ~~Each portion of the building~~ Separated occupancies shall be individually classified as to use in accordance with Section 302.1 ~~and shall be completely separated from adjacent areas by fire barrier walls or horizontal assemblies or both having a fire-resistance rating determined in accordance with Table 302.3.2 for uses being separated~~. Each fire area shall comply with this code based on the use of that space. Each fire area shall comply with the height limitations of Section 503 based on the occupancy classification of that portion of the building. ~~use of that space and the type of construction classification. In each story, the building area shall be such that the sum of the ratios of the floor area of each use divided by the allowable area for each use shall not exceed one.~~

Exceptions: ~~Except for Group H and I-2 areas, where the building is equipped throughout with an automatic sprinkler system installed in accordance with Section 903.3.1.1, the fire-resistance ratings in Table 302.3.2 shall be reduced by 1 hour, but to not less than 1 hour and to not less than that required for floor construction according to the type of construction.~~

1. The private garage shall be separated from the dwelling unit and its attic area by means of minimum ½-inch (12.7 mm) gypsum board applied to the garage side. Garages beneath habitable rooms shall be separated from all habitable rooms above by not less than 5/8 inch Type X gypsum board or equivalent. Door openings between the garage and the residence shall be equipped with either solid wood doors not less than 13/8 inches (35 mm) thick, solid or honeycomb core steel doors not less than 13/8 inches (35 mm) thick or doors in compliance with Section 714.2.3. Openings from a private garage directly into a room used for sleeping purposes shall not be permitted.

2. Ducts in the garage and ducts penetrating the walls or ceilings separating the dwelling from the garage shall be constructed of a minimum No. 26 gage (0.48 mm) sheet steel and shall have no openings into the garage.

3. A separation is not required between a Group R-3 and ~~Group U~~ a noncombustible carport provided the carport is entirely open on two or more sides and there are not enclosed uses above. The area of the carport shall be considered as a separate building for determining the allowable area.

302.3.2.1 Allowable area and height. In each story, the building area shall be such that the sum of the ratios of the actual floor area of each occupancy divided by the allowable area of each occupancy shall not exceed one. Each fire area shall comply with the height limitations based on the type of construction of the building in accordance with Section 503.1.

302.3.2.2 Separation. Individual occupancies within a given story or located on other stories within the same building area shall be separated from other adjacent occupancies as required by Table 302.3.2.

302.3.2.3 Construction. Required separations shall be fire barriers in accordance with Section 706 or horizontal assemblies in accordance with Section 711, or both so as to completely separate adjacent occupancies.

TABLE 303.3.2 — DELETE IN ITS ENTIRETY AND INSERT THE FOLLOWING TABLE IN ITS PLACE.

TABLE 302.3.2
REQUIRED SEPARATION OF OCCUPANCIES (HOURS)

OCCUPANCY	A[e], E[f]		I		R[d]		F-2, S-2[cd], U[d]		B[b], F-1, M[b,g], S-1		H-1		H-2		H-3, H-4, H-5	
	S	NS	S	NS	S	NS	S	NS	S	NS	S	NS	S	NS	S	NS
A[e], E[e]	N	N	1	2	1	2	N	1	1	2	NP	NP	3	4	2	3[a]
I			N	N	1	NP	1	2	1	2	NP	NP	3	NP	2	NP
R[d]					N	N	1	2	1	2	NP	NP	3	NP	2	NP
F2, S-2[cd], U[d]							N	N	1	2	NP	NP	3	4	2	3[a]
B[b], F-1, M[b,g], S-1									N	N	NP	NP	2	3	1	2[a]
H-1											N	NP	NP	NP	NP	NP
H-2													N	NP	1	NP
H-3, H-4, H-5															N	NP

S = Buildings equipped throughout with an automatic sprinkler system installed in accordance with Section 903.3.1.1.
NS = Buildings not equipped throughout with an automatic sprinkler system installed in accordance with Section 903.3.1.1
N = No separation requirement.
NP = Not permitted.

a. For Group H-5 occupancies, See Section 903.2.4.2.
b. Occupancy separation need not be provided for storage areas within Groups B and M if the:
   1. Area is less than 10 percent of the floor area.
   2. Area is equipped with an automatic fire-extinguishing system and is less than 3,000 square feet; or
   3. Area is less than 1,000 square feet.
c. Areas used only for private or pleasure vehicles shall be allowed to reduce separation by 1 hour.
d. See Section 406.1.4.
e. Commercial kitchens need not be separated from the ~~restaurant seating~~ dining areas that they serve.
f. Day care facilities shall be separated from assembly areas where alcohol is served.
g. Stock areas are not required to be separated from retail areas within auto parts stores, shoe stores or similar retail stores, where employees are required to access the stock area in order to serve the customers.

303.1 Assembly Group A. Assembly Group A occupancy includes, among others, the use of a building or structure, or a portion thereof, for the gathering together of persons for purposes such as civic, social or religious functions, recreation, food or drink consumption or awaiting transportation~~. A room or space used for assembly purposes by less than 50 persons and accessory to another occupancy shall be included as a part of that occupancy. Assembly areas with less than 750 square feet (69.7 m^2) and which are accessory to another occupancy according to Section 302.2.1 are not assembly occupancies. Assembly occupancies which are accessory to Group E in accordance with Section 302.2 are not considered assembly occupancies. Religious educational rooms and religious auditoriums which are accessory to churches in accordance with Section 302.2 and which have occupant loads of less than 100 shall be classified as A-3.~~

Exceptions:

1. A building used for assembly purposes with an occupant load of less than 50 persons shall be classified as a Group B occupancy.
2. A room or space used for assembly purposes with an occupant load of less than 50 persons, and accessory to another occupancy, shall be classified as a Group B occupancy or classified as part of that occupancy.
3. A room or space used for assembly purposes that is less than 750 square feet (69.7 m^2) in area, and which is accessory to another occupancy, be shall be classified as a Group B occupancy or classified as part of that occupancy.

Assembly occupancies shall include the following:

A-1 Assembly uses, usually with fixed seating, intended for the production and viewing of the performing arts or motion pictures including, but not limited to:

Motion picture theaters

Symphony and concert halls

Television and radio studios admitting an audience

Theaters

A-2 Assembly uses intended for food and/or drink consumption including, but not limited to:

Banquet halls

Night clubs

Restaurants

Taverns and bars

A-3 Assembly uses intended for worship, recreation or amusement and other assembly uses not classified elsewhere in Group A including, but not limited to:

Amusement arcades

Art galleries

Bowling alleys

~~Churches~~ Religious worship places

Community halls

Courtrooms

Dance halls (not including food or drink consumption)

Exhibition halls

Funeral parlors

Gymnasiums (without spectator seating)

Indoor swimming pools (without spectator seating)

Indoor tennis courts (without spectator seating)

Lecture halls

Libraries

Museums

Waiting areas in transportation terminals

Pool and billiard parlors

A-4 Assembly uses intended for viewing of indoor sporting events and activities with spectator seating including, but not limited to:

Arenas

Skating rinks

Swimming pools

Tennis courts

A-5 Assembly uses intended for participation in or viewing outdoor activities including, but not limited to:

Amusement park structures

Bleachers

Grandstands

Stadiums

~~**303.1.1 Nonaccessory assembly use.** A building or tenant space used for assembly purposes by less than 50 persons shall be considered a Group B occupancy.~~

304.1 Business Group B. Business Group B occupancy includes, among others, the use of a building or structure, or a portion thereof, for office, professional or service-type transactions, including storage of records and accounts. Business occupancies shall include, but not be limited to, the following:

Airport traffic control towers

Animal hospitals, kennels and pounds

Banks

Barber and beauty shops

Car wash

Civic administration

Clinic—outpatient

Dry cleaning and laundries; pick-up and delivery stations and self-service

Educational occupancies above the 12th grade

Electronic data processing

Laboratories; testing and research

Motor vehicle showrooms

Post offices

Print shops

Professional services (architects, attorneys, dentists, physicians, engineers, etc.)

Radio and television stations

Telephone exchanges

<u>Training and skill development not within a school.</u>

[F] 307.1 High-Hazard Group H. High-Hazard Group H occupancy includes, among others, the use of a building or structure, or a portion thereof, that involves the manufacturing, processing, generation or storage of materials that constitute a physical or health hazard in excess of quantities ~~in excess~~ allowed in control areas constructed and located as required in Section 414. ~~of those found in Tables 307.7(1) and 307.7(2) (see also definition of "Control area")~~. Hazardous uses are classified in Groups H-1, H-2, H-3, H-4 and H-5 and shall be in accordance with this section, the requirements of Section 415 and the *Fire Code*.

Exceptions: The following shall not be classified in Group H, but shall be classified in the occupancy that they most nearly resemble.

1. Buildings and structures that contain not more than the maximum allowable quantities per control area of hazardous materials as shown in Tables 307.7(1) and 307.7(2) provided that such buildings are maintained in accordance with the *Fire Code*.
2. Buildings utilizing control areas in accordance with Section 414.2 that contain not more than the maximum allowable quantities per control area of hazardous materials as shown in Tables 307.7(1) and 307.7(2).
3. Buildings and structures occupied for the application of flammable finishes, provided that such buildings or areas conform to the requirements of Section 416, NFPA 33, NFPA 34 and the *Fire Code*.
4. Wholesale and retail sales and storage of flammable and combustible liquids in mercantile occupancies conforming to the *Fire Code*.
5. Closed systems housing flammable or combustible liquids or gases utilized for the operation of machinery or equipment.
6. Cleaning establishments that utilize combustible liquid solvents having a flash point of 140°F (60°C) or higher in closed systems employing equipment listed by an approved testing agency, provided that this occupancy is separated from all other areas of the building by 1-hour fire-resistance-rated fire barriers.
7. Cleaning establishments which utilize a liquid solvent having a flash point at or above 200°F (93°C).
8. Liquor stores and distributors without bulk storage.
9. Refrigeration systems.
10. The storage or utilization of materials for agricultural purposes on the premises.
11. Stationary batteries utilized for facility emergency power, uninterrupted power supply or telecommunication facilities provided that the batteries are provided with safety venting caps and ventilation is provided in accordance with the *Fire Code* and *Mechanical Code*.
12. Corrosives shall not include personal or household products in their original packaging used in retail display or commonly used building materials.
13. Buildings and structures occupied for aerosol storage shall be classified as Group S-1, provided that such buildings conform to the requirements of the *Fire Code*.
14. Display and storage of nonflammable solid and nonflammable or noncombustible liquid hazardous materials in quantities not exceeding the maximum allowable quantity per control area in Group M or S occupancies complying with Section 414.2.4.
15. The storage of black powder, smokeless propellant and small arms primers in Groups M and R-3 and special industrial explosive devices in Groups B, F, M and S, provided such storage conforms to the quantity limits and requirements prescribed in the *Fire Code*.
16. Any building owned by the jurisdiction, located on any city airport, that is leased and used by a certificated air carrier for the in-transit storage of hazardous materials for a period of time that

does not exceed seventy-two hours from the time such hazardous material is placed in the building until it is permanently removed.

NOTES:

1. *Certificated air carrier* is defined as: a U.S. or foreign airline operating scheduled or non-scheduled commercial services pursuant to certificates or exemptions issued by the United States Department of Transportation pursuant to 49 USC Sections 40109, 41102, 41103, or 41302, and certificates or exemptions issued by the United States Federal Aviation Administration pursuant to 14 CFR Parts 121, 125, 129 or 135.
2. *City airport* is defined in Chapter 9 of the City Code.
3. *In-transit storage* is defined as: the storage of materials which will be on-loaded onto or off-loaded from an aircraft owned, leased or operated by a *certificated air carrier*.

307.1.1 Hazardous materials. Hazardous materials in any quantity shall conform to the requirements of this code, including Section 414, and the *Fire Code*.

Exception: Hazardous materials stored in any building exempted pursuant to Section 307.1, Exception 16.

***[F] 307.2 Definitions.** The following words and terms shall, for the purposes of this section and as used elsewhere in this code, have the meanings shown herein.

DAY BOX. A portable magazine designed to hold explosive materials constructed in accordance with the requirements for a Type 3 magazine as defined and classified in Chapter 33 of the *Fire Code*.

WATER-REACTIVE MATERIAL. A material that explodes; violently reacts; produces flammable, toxic or other hazardous gases; or evolves enough heat to cause ~~self-~~ autoignition or ignition of ~~nearby~~ combustibles upon exposure to water or moisture. Water-reactive materials are subdivided as follows:

Class 3. Materials that react explosively with water without requiring heat or confinement.

Class 2. Materials that react violently with water or have the ability to boil water~~. may form potentially explosive mixtures with water~~. Materials that produce flammable, toxic or other hazardous gases, or evolve enough heat to cause autoignition or ignition of combustibles upon exposure to water or moisture.

Class 1. Materials that ~~may~~ react with water with some release of energy, but not violently.

***NOTE: ALL OTHER PORTIONS OF THIS SECTION 307.2 TO REMAIN AS SET FORTH IN THE 2003 INTERNATIONAL BUILDING CODE.**

[F] TABLE 307.7(1)
MAXIMUM ALLOWABLE QUANTITY PER CONTROL AREA OF HAZARDOUS MATERIAL POSING A PHYSICAL HAZARD[a, j,m,n]

MATERIAL	CLASS	GROUP WHEN THE MINIMUM ALLOWABLE QUANTITY IS EXCEEDED	STORAGE [b]			USE-CLOSED SYSTEMS [b]			USE-OPEN SYSTEMS [b]	
			Solid pounds (cubic feet)	Liquid gallons (pounds)	Gas cubic feet	Solid pounds (cubic feet)	Liquid gallons (pounds)	Gas cubic feet	Solid pounds (cubic feet)	Liquid gallons (pounds)
Combustible liquid[c, i]	II IIIA IIIB	H-2 or H-3 H-2 or H-3 NA	N/A	120 [d, e] 330 [d, e] 13,200 [e, f]	N/A	N/A	120 [d] 220 [d] 13,200 [f]	N/A	N/A	30 [d] 80 [d] 3,300 [f]
Combustible fiber	Loose Baled	H-3	(100) (1,000)	N/A	N/A	(100) (1,000)	N/A	N/A	(20) (200)	N/A
Consumer fireworks (Class C, Common)	1.4G	H-3	125[d,e,l]	N/A	N/A	N/A	N/A	N/A	N/A	N/A
Cryogenics, flammable		H-2	N/A	45[d]	N/A	N/A	45[d]	N/A	N/A	10[d]
Cryogenics, oxidizing	N/A	H-3	N/A	45[d]	N/A	N/A	45[d]	N/A	N/A	10[d]
Explosives	Division 1.1 Division 1.2 Division 1.3 Division 1.4 Division 1.4G Division 1.5 Division 1.6	H-1 H-1 H-1 or 2 H-3 H-3 H-1 H-1	1e, g 1e, g 5e, g 50e, g 125d, e, l 1e, g 1d, e, g	(1)e, g (1)e, g (5)e, g (50)e, g N/A (1)e, g N/A	N/A N/A N/A N/A N/A N/A N/A	0.25g 0.25g 1g 50g N/A 0.25g N/A	(0.25)g (0.25)g (1)g (50)g N/A (0.25)g N/A	N/A N/A N/A N/A N/A N/A N/A	0.25g 0.25g 1g N/A N/A 0.25g N/A	(0.25)g (0.25)g (1)g N/A N/A (0.25)g N/A
Flammable gas	Gaseous Liquefied	H-2	N/A	N/A 30[d,e]	1000[d,e] N/A	N/A	N/A 30[d,e]	1000[d,e] N/A	N/A	N/A

Flammable liquid[c]	1A 1B and 1C	H-2 or H-3	N/A	30d, e 120d, e	N/A	N/A	30d 120d	N/A	N/A	10d 30d
Combination (1A, 1B, 1C)	N/A	H-2 or H-3	N/A	120[d,e,h]	N/A	N/A	120[d,h]	N/A	N/A	30[d,h]
Flammable solid	N/A	H-3	125[d,e]	N/A	N/A	125[d]	N/A	N/A	25[d]	N/A
Organic peroxide	U[d] I II III IV V	H-1 H-2 H-3 H-3 N/A N/A	1[e,g] 5[d,e] 50[d,e] 125[d,e] NL NL	(1)[e,g] (5)[d,e] (50)[d,e] (125)[d,e] NL NL	N/A N/A N/A N/A N/A N/A	1/4 [g] 1[d] 50[d] 125[d] NL NL	(1/4)[g] (1)[d] (50)[d] (125)[d] NL NL	N/A N/A N/A N/A N/A N/A	1/4 [g] 1[d] 10[d] 25[d] NL NL	(1/4)[g] (1)[d] (10)[d] (25)[d] NL NL
Oxidizer	4 3[K] 2 1	H-1 H-2 or H-3 H-3 H-3	1[g] 10[d,e] 250[d,e] 4000[e,f,]	(1)[eg] (10)[d,e] (250)[d,e] (4000)[e,f]	N/A N/A N/A N/A	1/4[g] 2[d] 250[d] 4000[f]	(1/4)[g] (2)[d] (250)[d] (4000)[f]	N/A N/A N/A N/A	1/4[g] 2[d] 50[d] 1000[f]	(1/4)[g] (2)[d] (50)[d] (1000)[f]
Oxidizing gas	Gaseous Liquefied	H-3	N/A N/A	N/A 15[d,e]	1,500[d,e] N/A	N/A N/A	N/A 15[d,e]	1,500[d,e] N/A	N/A N/A	N/A N/A
Pyrophoric material	N/A	H-2	4[e,g]	(4)[e,g]	50[e,g]	1[g]	(1)[g]	10[e,g]	0	0
Unstable (reactive)	4 3 2 1	H-1 H-1 or H-2 H-2 H-3	1[e,g] 5[d,e] 50[d,e] NL	(1)[e,g] (5)[d,e] (50)[d,e] NL	10[d,g] 50[d,e] 250[d,e] NL	1/4 [g] 1[d] 50[d] NL	(1/4)[g] (1)[d] (50)[d] NL	2[e,g] 10[d,e] 250[d,e] NL	0.25[g] 1[d] 10[d] NL	(1/4) [g] (1)[d] (10)[e] NL
Water reactive	3 2 1	N/A H-2 H-3	5[d,e] 50[d,e] NL	(5)[d,e] (50)[d,e] NL	N/A N/A N/A	5[d] 50[d] NL	(5)[d] (50)[d] NL	N/A N/A N/A	1[d] 10[d] NL	(1)[d] (10)[d] NL

Notes to Table 307.7(1)
For SI: 1 cubic foot = 0.023 m³, 1 pound = 0.454 kg, 1 gallon = 3.785 L.

NL = Not Limited; N/A = Not Applicable

a. For use of control areas, see Section 414.2.

b. The aggregate quantity in use and storage shall not exceed the quantity listed for storage.

c. The quantities of alcoholic beverages in retail and wholesale sales occupancies shall not be limited providing the liquids are packaged in individual containers not exceeding 1.3 gallons. In retail and wholesale sales occupancies the quantities of medicines, foodstuffs, consumer or industrial products, and cosmetics containing not more than 50 percent by volume of water-miscible liquids with the remainder of the solutions not being flammable shall not be limited, provided that such materials are packaged in individual containers not exceeding 1.3 gallons (5L).

d. Maximum quantities shall be increased 100 percent in buildings equipped throughout with an automatic sprinkler system in accordance with Section 903.3.1.1. Where Note e also applies, the increase for both notes shall be applied accumulatively.

e. Maximum allowable ~~Q~~ quantities shall be increased 100 percent when stored in approved storage cabinets, day boxes, gas cabinets, exhausted enclosures, or safety cans ~~as specified in the *International Fire Code*~~. Where Note d also applies, the increase for both notes shall be applied accumulatively.

f. The permitted quantities shall not be limited in a building equipped throughout with an automatic sprinkler system in accordance with Section 903.3.1.1.

g. Permitted only in buildings equipped throughout with an automatic sprinkler system in accordance with Section 903.3.1.1.

h. Containing not more than the maximum allowable quantity per control area of Class I-A, Class I-B or Class I-C flammable liquids.

i. Inside a building, the maximum capacity of a combustible liquid storage system that is connected to a fuel-oil piping system shall be 660 gallons provided such system conforms to the ~~*International*~~ *Fire Code*.

j. Quantities in parenthesis indicate quantity units in parenthesis at the head of each column.

k. A maximum quantity of 200 pounds of solid or 20 gallons of liquid Class 3 oxidizers is allowed when such materials are necessary for maintenance purposes, operation or sanitation of equipment. Storage containers and the manner of storage shall be approved.

l. Net weight of the pyrotechnic composition of the fireworks. Where the net weight of the pyrotechnic composition of the fireworks is not known, 25 percent of the gross weight of the fireworks including packaging shall be used.

m. For gallons of liquids, divide the amount in pounds by 10 in accordance with Section 2703.1.2 of the ~~International~~ Fire Code.

n. For storage and display quantities in Group M and storage quantities in Group S occupancies complying with Section 414.2.4, see Table 414.2.4.

307.9 — DELETE IN ITS ENTIRETY.

308.3 Group I-2. This occupancy shall include buildings and structures used for medical, surgical, psychiatric, nursing or custodial care on a 24-hour basis of more than five persons who are not capable of self-preservation. This group shall include, but not be limited to, the following:

Hospitals

Nursing homes (both intermediate-care facilities and skilled nursing facilities)

Mental hospitals

Detoxification facilities

~~A facility such as the above with five or fewer persons shall be classified as a Group R-3 or shall comply with the *International Residential Code* in accordance with Section 101.2~~

308.5.2 Child care facility. A facility that provides supervision and personal care on less than a 24-hour basis for more than five children 2½ years of age or less shall be classified as Group I-4.

> **Exception:** A child day care facility that provides care for more than five but no more than 100 children 2 ½ years of age or less ~~of age~~, when the rooms where such children are cared for are located on the level of exit discharge and each of these child care rooms has an exit door directly to the exterior or the fire area is sprinklered, shall be classified as Group E.

309.1 Mercantile Group M. Mercantile Group M occupancy includes, among others, buildings and structures or a portion thereof, for the display and sale of merchandise, and involves stocks of goods, wares or merchandise incidental to such purposes and accessible to the public. Mercantile occupancies shall include, but not be limited to, the following:

Department stores

Drug stores

Markets

Motor fuel-dispensing facilities

Oil change facilities

Retail or wholesale stores

Sales rooms

310.1 Residential Group R. Residential Group R includes, among others, the use of a building or structure, or a portion thereof, for sleeping purposes when not classified as an Institutional Group I. Residential occupancies shall include the following:

R-1 Residential occupancies where the occupants are primarily transient in nature, including:

Boarding houses (transient)

Hotels (transient)

Motels (transient)

R-2 Residential occupancies containing sleeping units or more than two dwelling units where the occupants are primarily permanent in nature, including:

Apartment houses

Boarding houses (not transient)

Congregate living facilities with less than 16 persons

~~Convents~~

~~Dormitories~~

~~Fraternities and sororities~~

~~Monasteries~~

Vacation timeshare properties

Hotels (nontransient)

Motels (nontransient)

R-3 Residential occupancies where the occupants are primarily permanent in nature and not classified as R-1, R-2, R-4 or I ~~and where~~ including:

~~b~~Buildings that do not contain more than two dwelling units, as applicable in Section 101.2~~, or~~

~~a~~Adult ~~and child~~ care facilities that provide accommodations for five or fewer persons of any age for less than 24 hours~~.~~

Child care facilities that provide accommodations for five or fewer persons of any age for less than 24 hours

Congregate living facilities with 16 or fewer persons~~.~~

Adult care facilities and child care facilities that are within a single-family home are permitted to comply with the *International Residential Code* in accordance with Section 101.2.

R-4 Residential occupancies shall include buildings arranged for occupancy as residential care/assisted living facilities including more than five but not more than 16 occupants, excluding staff.

Group R-4 occupancies shall meet the requirements for construction as defined for Group R-3 except as otherwise provided for in this code or shall comply with the *International Residential Code* in accordance with Section 101.2.

***310.2 Definitions.** The following words and terms shall, for the purposes of this section and as used elsewhere in this code, have the meanings shown herein.

CONGREGATE LIVING FACILITY. A building or portion thereof that contains facilities for living, sleeping and sanitation, as required by this code, and may include facilities for eating and cooking, for occupancy by other than a family. A congregate living facility may be a shelter, convent, monastery, dormitory, fraternity, or sorority house, but does not include jails, hospitals, nursing homes, hotels or boarding houses.

FAMILY. An individual or two or more persons related by blood or marriage or a group of not more than 10 persons (excluding servants) who need not be related by blood or marriage living together in a dwelling unit.

TRANSIENT. Occupancy of a dwelling unit or sleeping unit for not more than 30 days.

***NOTE: ALL OTHER PORTIONS OF THIS SECTION 310.2 TO REMAIN AS SET FORTH IN THE 2003 INTERNATIONAL BUILDING CODE.**

311.2 Moderate-hazard storage, Group S-1. Buildings occupied for storage uses which are not classified as Group S-2 including, but not limited to, storage of the following:

Aerosols, Levels 2 and 3

Aircraft repair hangar

Bags; cloth, burlap and paper

Bamboos and rattan

Baskets

Belting; canvas and leather

Books and paper in rolls or packs

Boots and shoes

Buttons, including cloth covered, pearl or bone

Cardboard and cardboard boxes

Clothing, woolen wearing apparel

Cordage

Dry boat storage (indoor)

Furniture

Furs

Glues, mucilage, pastes and size

Grains

Horns and combs, other than celluloid

Leather

Linoleum

Lumber

Motor vehicle repair garages complying with the maximum allowable quantities of hazardous materials listed in Table 307.7(1) (see Section 406.6)

Photo engravings

Resilient flooring

Silks

Soaps

Sugar

Tires, bulk storage of

Tobacco, cigars, cigarettes and snuff

Upholstery and mattresses

Wax candles

312.1 General. Buildings and structures of an accessory character and miscellaneous structures not classified in any specific occupancy shall be constructed, equipped and maintained to conform to the

requirements of this code commensurate with the fire and life hazard incidental to their occupancy. Group U shall include, but not be limited to, the following:

Agricultural buildings

Aircraft hangars, accessory to a one- or two-family residence (see Section 412.3)

Barns

Carports

Fences ~~more than 6 feet (1829 mm) high~~

Grain silos, accessory to a residential occupancy

Greenhouses

Livestock shelters

Private garages

Retaining walls

Sheds

Stables

Tanks

Towers

312.2 Tower structures. Tower structures shall be designed and constructed to sustain, with the stress limitations specified in this code, all loads specified in Chapter 16 and all other anticipated loads based on the use of the tower.

312.3 Fences.

312.3.1 Location. Fence location is not restricted on property, but its foundation shall be subject to the same regulations on extensions onto public property as building foundations.

312.3.2 Barbed wire. Barbed wire for fences shall be allowed only 6 feet above ground except as otherwise allowed by the City Code.

312.3.3 Electric. Electrically charged fences are prohibited.

312.3.4 Design. Design of fences shall be in accordance with Chapter 16 with loading as required for signs.

CHAPTER 4

SPECIAL DETAILED REQUIREMENTS BASED ON USE AND OCCUPANCY

402.1 Scope. The provisions of this section shall apply to buildings or structures defined herein as covered mall buildings not exceeding three floor levels at any point nor more than three stories above grade plane. Except as specifically required by this section, covered mall buildings shall meet applicable provisions of this code.

Exceptions:

1. Foyers and lobbies of Groups B, R-1 and R-2 are not required to comply with this section.
2. Buildings need not comply with the provisions of this section where they totally comply with other applicable provisions of this code.

402.4.5.1 Exit passageway ~~enclosures~~. Where exit passageways ~~enclosures~~ provide a secondary means of egress from a tenant space, doors to the exit passageway ~~enclosures~~ shall be 1-hour fire doors. Such doors shall be self-closing and be so maintained or shall be automatic-closing by smoke detection.

402.4.6 Service areas fronting on exit passageways. Mechanical rooms, electrical rooms, building service areas and service elevators are permitted to open directly into exit passageways provided that the exit passageway is separated from such rooms with not less than 1-hour fire-resistance-rated ~~walls~~ fire barriers and 1-hour opening protectives.

402.7.3 Anchor building separation. An anchor building shall be separated from the covered mall building by fire walls complying with Section 705.

Exception: Anchor buildings of not more than three stories above grade plane which have an occupancy classification of the same uses permitted as tenants of the covered mall building shall be separated by 2-hour fire resistive fire barriers complying with Section 706.

402.9 Smoke control. A smoke control system shall be provided where required for atriums in Section 404.

Exception: Smoke control is not required for malls that connect only two stories.

402.11 Children's playground structures. Structures intended as children's playgrounds which exceed 10 feet (3.05 m) in height and 150 feet (14 m^2) in area shall comply with the following.

402.11.1 Combustible materials. Children's playground structures shall be constructed of noncombustible materials or of combustible materials that comply with the following:

1. Fire-retardant-treated wood.
2. Light-transmitting plastics complying with Section 2606.
3. Foam plastics (including the pipe foam used in soft-contained play equipment structures) having a maximum heat-release rate not greater than 100 kW when tested in accordance with UL 1975.

4. Aluminum composite material (ACM) meeting the requirements of Class A interior finish in accordance with Chapter 8 when tested as an assembly in the maximum thickness intended for use.

5. Textiles and films complying with the flame propagation performance criteria contained in NFPA 701.

6. Plastic materials used to construct rigid components of soft-contained play equipment structures (such as tubes, window, panels, junction boxes, pipes, slides and decks) meeting the UL 94 V-2 classification when tested in accordance with UL 94.

7. Ball pool balls, used in soft-contained play equipment structures, having a maximum heat release rate not greater than 100 kW when tested in accordance with UL 1975. The minimum specimen test size shall be 36 inches by 36 inches (0.91 m by 0.91 m) by an average of 21 inches (0.56 m) deep, and the balls shall be held in a box constructed of galvanized steel poultry netting wire mesh.

8. Foam plastics shall be covered by a fabric, coating, or film meeting the flame propagation performance criteria of NFPA 701.

9. The floor covering placed under the children's playground structure shall exhibit a Class I interior floor finish classification, as described in Section 804, when tested in accordance with NFPA 253.

402.11.2 Fire suppression and detection. Children's playground structures located within the mall shall be provided with the same level of approved fire suppression and detection required for kiosks and similar structures.

402.11.3 Separation. Children's playground structures shall have a minimum horizontal separation from other structures within the mall of 20 feet (6.10 m).

402.11.4 Size. Children's playground structures shall not exceed 300 square feet (28 m^2) in area, unless a special investigation has demonstrated adequate fire safety.

402.12 Security grilles and doors. Horizontal sliding or vertical security grilles or doors that are a part of a required means of egress shall conform to the following:

1. They shall remain in the full open position during the period of occupancy by the general public.
2. Doors or grilles shall not be brought to the closed position when there are more than 10 persons occupying spaces served by a single exit or 50 persons occupying spaces served by more than one exit.
3. The doors or grilles shall be openable from within without the use of any special knowledge or effort where the space is occupied.
4. Where two or more exits are required, not more than one-half of the exits shall be permitted to include either a horizontal sliding or vertical rolling grille or doors.

~~402.12~~ 402.13 Standby power. Covered mall buildings exceeding 50,000 square feet (4645 m^2) shall be provided with standby power systems that are capable of operating the emergency voice/alarm communication system.

[F] ~~402.13~~ 402.14 Emergency voice/alarm communication system. Covered mall buildings exceeding 50,000 square feet (4645 m^2) in total floor area shall be provided with an emergency voice/alarm communication system. Emergency voice/alarm communication systems serving a mall, required or otherwise, shall be accessible to the fire department. The system shall be provided in accordance with Section 907.2.12.2.

~~402.14~~ **402.15 Plastic signs.** ~~Within every store or level and from sidewall to sidewall of each~~ Plastic signs affixed to the storefront of any tenant space facing the mall~~, plastic signs~~ shall be limited as specified in Sections ~~402.14.1~~ 402.15.1 through ~~402.14.5~~ 402.15.5.

~~402.14.1~~ **402.15.1 Area.** Plastic signs shall not exceed 20 percent of the wall area facing the mall.

~~402.14.2~~ **402.15.2 Height and width.** Plastic signs shall not exceed a height of 36 inches (914 mm), except if the sign is vertical, the height shall not exceed 96 inches (2438 mm) and the width shall not exceed 36 inches (914 mm).

~~402.14.3~~ **402.15.3 Location.** Plastic signs shall be located a minimum distance of 18 inches (457 mm) from adjacent tenants.

~~402.14.4~~ **402.15.4 Plastics other than foam plastics.** Plastics other than foam plastics used in signs shall be light- transmitting plastics complying with Section 2606.4 or shall have a self-ignition temperature of 650°F (343°C) or greater when tested in accordance with ASTM D 1929, and a flame spread index not greater than 75 and smoke-developed index not greater than 450 when tested in the manner intended for use in accordance with ASTM E 84 or meet the acceptance criteria of Section 803.2.1 when tested in accordance with NFPA 286.

~~402.14.4.1~~ **402.15.4.1 Encasement.** Edges and backs of plastic signs in the mall shall be fully encased in metal.

~~402.14.5~~ **402.15.5 Foam plastics.** Foam plastics used in signs shall have flame-retardant characteristics such that the sign has a maximum heat-release rate of 150 kilowatts when tested in accordance with UL 1975 and the foam plastics shall have the physical characteristics specified in this section. Foam plastics used in signs installed in accordance with Section ~~402.14~~ 402.15 shall not be required to comply with the flame spread and smoke-developed indexes specified in Section 2603.3.

~~402.14.5.1~~ **402.15.5.1 Density.** The minimum density of foam plastics used in signs shall not be less than 20 pounds per cubic foot (pcf) (320 kg/M^3).

~~402.14.5.2~~ **402.15.5.2 Thickness.** The thickness of foam plastic signs shall not be greater than 1/2-inch (12.7 mm).

~~402.15~~ **402.16 Fire department access to equipment.** Rooms or areas containing controls for air-conditioning systems, automatic fire-extinguishing systems or other detection, suppression or control elements shall be identified for use by the fire department.

403.1 Applicability. The provisions of this section shall apply to buildings having occupied floors located more than 75 feet (22 860 mm) above ~~the lowest level of fire department vehicle access~~ grade plane.

Exception: The provisions of this section shall not apply to the following buildings and structures.

1. Airport traffic control towers in accordance with Section 412.
2. Open parking garages in accordance with Section 406.3.
3. Buildings with an occupancy in Group A-5 in accordance with Section 303.1.
4. Low-hazard special industrial occupancies in accordance with Section 503.1.2.
5. Buildings with an occupancy in Group H~~-1, H-2 or H-3~~ in accordance with Section 415.

[F] 403.2 Automatic sprinkler system. Buildings and structures shall be equipped throughout with an automatic sprinkler system in accordance with Section 903.3.1.1 and a secondary water supply where required by Section 903.3.5.2. The sprinkler system shall also be designed in accordance with the following:

1. Shutoff valves and a water-flow device shall be provided for each floor. In addition to activating a local alarm on the floor upon which the water flow is detected, such valves shall be continuously monitored at the buildings's central control station room.

2. The sprinkler riser may be combined with the standpipe riser.

3. Automatic sprinkler system piping on adjacent floors shall be connected to different fire risers.

Exception: An automatic sprinkler system shall not be required in spaces or areas of:

1. Open parking garages in accordance with Section 406.3.

2. Telecommunications equipment buildings used exclusively for telecommunications equipment, associated electrical power distribution equipment, batteries and standby engines, provided that those spaces or areas are equipped throughout with an automatic fire detection system in accordance with Section 907.2 and are separated from the remainder of the building ~~with~~ by fire barriers consisting of not less than 1-hour fire-resistance-rated walls and 2-hour fire-resistance-rated floor/ceiling assemblies.

403.3 Reduction in fire-resistance rating. ~~The fire-resistance-rating reductions listed in Sections 403.3.1 and 403.3.2 shall be allowed in buildings that have sprinkler control valves equipped with supervisory initiating devices and water flow initiating devices for each floor.~~ Reduction will be allowed as set forth in Table 601 and Section 707.4.

~~**403.3.1 Type of construction.** The following reductions in the minimum construction type allowed in Table 601 shall be allowed as provided in Section 403.3:~~

~~1. Type IA construction shall be allowed to be reduced to Type IB.~~

~~2. In other than Groups F-1, M and S-1, Type IB construction shall be allowed to be reduced to Type IIA.~~

~~3. The height and area limitations of the reduced construction type shall be allowed to be the same as for the original construction type.~~

~~**403.3.2 Shaft enclosures.** The required fire-resistance rating of the fire barrier walls enclosing vertical shafts, other than exit enclosures and elevator hoistway enclosures, shall be reduced to 1 hour where automatic sprinklers are installed within the shafts at the top and at alternate floor levels.~~

403.10.1 Special requirements for standby power systems. If the standby system is a generator set inside a building, the system shall be located in a separate room enclosed with 2-hour fire-resistance-rated fire barrier assemblies. System supervision with manual start and transfer features shall be provided at the fire command center.

403.12 Stairway door operation. Stairway doors ~~other than the exit discharge doors~~ into exit enclosures shall be ~~permitted to be~~ maintained unlocked from the stairway side on at least every fifth floor level. ~~Stairway doors that are locked from the stairway side shall be capable of being unlocked simultaneously without unlatching upon a signal from the fire command center.~~

Exceptions: All stairway doors may be locked from the stair side subject to all of the following conditions:

1. Required re-entry doors, on at least every fifth floor, which are locked from the stairway side, shall have the capability of being unlocked without unlatching upon a signal from an approved location. (See Section 1210.4 of the Fire Code) and be subordinate to the fire alarm. The re-entry requirement shall provide that the first floor and the top floor be required to be unlocked in every high-rise building.

2. A telephone or other two-way communication system connected to an approved emergency service that operates continuously shall be provided at every required re-entry door.

3. A sign shall be placed on the stair side of the stair entry door identifying that floor and the nearest floor above and below where a telephone or two-way communication system is located.

4. All manual and electronic locking devices on required exit doors in the stairways shall be subordinate to the fire alarm. Keys for stairwell re-entry doors shall be in compliance with HFD LSB Standard 06.

404.1 General. ~~Vertical openings meeting the requirements of this section are not required to be enclosed in~~ In other than Group H occupancies, and where permitted by Exception 5 in Section 707.2, the provisions of this section shall apply to buildings or structures containing vertical openings as defined herein as atriums.

404.1.1 Definition. The following word and term shall, for the purposes of this chapter and as used elsewhere in this code, have the meaning shown herein.

ATRIUM. An opening connecting ~~two~~ three or more stories other than enclosed stairways, elevators, hoistways, escalators, plumbing, electrical, air-conditioning or other equipment, which is closed at the top and not defined as a mall. Stories, as used in this definition, do not include balconies within assembly groups or mezzanines that comply with Section 505.

[F] 404.3 Automatic sprinkler protection. An approved automatic sprinkler system shall be installed throughout the entire building.

Exceptions:

1. That area of a building adjacent to or above the atrium need not be sprinklered provided that portion of the building is separated from the atrium portion by a 2-hour ~~fire-resistance-rated~~ fire barrier ~~wall or horizontal assembly or both~~.

2. Where the ceiling of the atrium is more than 55 feet (16 764 mm) above the floor, sprinkler protection at the ceiling of the atrium is not required.

404.4 Smoke control. A smoke control system shall be installed in accordance with Section 909.

~~**Exceptions:**~~

~~1. Smoke control is not required for floor openings meeting the requirements of Section 707.2, Exception 2,7, 8 or 9.~~

~~2. Smoke control is not required for floor openings meeting the requirements of Section 1019.1, Exception 8 or 9.~~

404.5 Enclosure of atriums. Atrium spaces shall be separated from adjacent spaces by a 1-hour fire barrier wall.

Exceptions:

1. A glass wall forming a smoke partition where automatic sprinklers are spaced 6 feet (1829 mm) or less along both sides of the separation wall, or on the room side only if there is not a walkway on the atrium side, and between 4 inches and 12 inches (102 mm and 305 mm) away from the glass and so designed that the entire surface of the glass is wet upon activation of the sprinkler system without obstruction. The glass shall be installed in a gasketed frame so that the framing system deflects without breaking (loading) the glass before the sprinkler system operates.

2. A glass block wall assembly in accordance with Section 2110 and having a 3/4-hour fire-protection rating.

3. The adjacent spaces of any three floors of the atrium shall not be required to be separated from the atrium where such spaces are included in computing the atrium volume for the design of the smoke control system.

4. Open exit-access balconies, unenclosed elevators or escalators and unrequired stairs are permitted within the atrium.

5. When existing atrium buildings are being remodeled or built-out for leasing, the proposed work shall meet the accepted guidelines that were in effect at the time the building was built or the original permit was issued.

405.4.2 Smoke barrier penetration. The ~~separation between the two~~ compartments shall be separated from each other by a smoke barrier in accordance with Section 709. Penetrations ~~be of minimum 1-hour fire barrier wall construction that shall extend from floor slab to floor deck above. Openings~~ between the two compartments shall be limited to plumbing and electrical piping and conduit ~~penetrations~~ that are firestopped in accordance with Section 712. Doorways shall be protected by door assemblies installed in accordance with NFPA 105, and Section 715.3.3 ~~that are automatic-closing by smoke detection in accordance with Section 715.3 and shall be provided with gasketing and a drop sill to minimize smoke leakage~~. Where provided, each compartment shall have an air supply and an exhaust system independent of the other compartments.

405.4.3 Elevators. Where elevators are provided, each compartment shall have direct access to an elevator. Where an elevator serves more than one compartment, an elevator lobby shall be provided and shall be separated from each compartment by a smoke barrier in accordance with Section 709 ~~1-hour fire barrier wall~~. Doors shall be gasketed, have a drop sill, and be automatic-closing by smoke detection installed in accordance with Section 907.10.

406.1.2 Area increase. Group U occupancies used for the storage of private or pleasure-type motor vehicles where no repair work is done or fuel dispensed are permitted to be 3,000 square feet (279 m^2), when the following provisions are met:

1. For a mixed occupancy building, the exterior wall and opening protection for the Group U portion of the building shall be as required for the major occupancy of the building. For such mixed occupancy building, the allowable floor area of the building shall be as permitted for the major occupancy contained therein.

2. For a building containing only a Group U occupancy, the exterior wall shall not be required to have a fire-resistance rating and the area of openings shall not be limited when the fire separation distance is 5 feet or more ~~and opening protection shall be as required for a Group R-1 or R-2 occupancy~~.

   Exception: Roofs of open non-combustible carports may extend to a point two feet from the property line.

More than one 3,000-square-foot (279 m^2) Group U occupancy shall be permitted to be in the same building, provided each 3,000 square-foot (279 m^2) area is separated by fire walls complying with Section 705.

406.1.4 Separation. Separations shall comply with the following:

1. The private garage shall be separated from the dwelling unit and its attic area by means of a minimum 1/2-inch (12.7 mm) gypsum board applied to the garage side. Garages beneath habitable rooms shall be separated from all habitable rooms above by not less than 5/8-inch Type X gypsum board or equivalent. Door openings between a private garage and the dwelling unit shall be equipped with either solid wood doors, or solid or

honeycomb core steel doors not less than 1 3/8 inches (34.9 mm) thick, or doors in compliance with Section 715.3.3. Openings from a private garage directly into a room used for sleeping purposes shall not be permitted. Doors shall be self-closing and self-latching. Attic disappearing stairs may be installed in the garage ceiling provided the exposed panel is not less than 3/8-inch thick fire retardant-treated plywood, covered with a minimum of 16 gage sheet metal, untreated plywood protected with ½ inch thick gypsum board, or untreated plywood protected with intumescent paint. In all cases, the opening protection material is applied to the garage side of the plywood.

2. Ducts in a private garage and ducts penetrating the walls or ceilings separating the dwelling unit from the garage shall be constructed of a minimum 0.019-inch (0.48 mm) sheet steel and shall have no openings into the garage.

3. A separation is not required between a Group R-3 and U carport provided the carport is entirely open on two or more sides and there are not enclosed areas above.

See also Section 1209.2.

406.2.4 Vehicle barriers. Parking areas shall be provided with exterior or interior walls or vehicle barriers, except at pedestrian or vehicular accesses, designed in accordance with Section 1607.7. Vehicle barriers not less than 2 feet (607 mm) high shall be placed at the ends of drive lanes, and at the end of parking spaces where the difference in adjacent floor elevation is greater than 1 foot (305 mm).

Exception: Vehicle storage compartments in a mechanical access parking garage.

406.2.5 Ramps. ~~Vehicle ramps shall not serve as an exit element~~ Vehicle ramps shall not be considered as required exits unless pedestrian facilities are provided. Vehicle ramps that are utilized for vertical circulation as well as for parking shall not exceed a slope of 1:15 (6.67 percent).

406.2.7 Mixed separation. Enclosed ~~P~~ parking garages shall be separated from other occupancies in accordance with Section 302.3.

406.2.10 Enclosure of vertical openings. Enclosure shall not be required for vertical openings except as specified in Sections 406.2.8 and 1019 .

406.3.4 Uses. Mixed uses shall be allowed in the same building as an open parking garage subject to the provisions of Sections 302~~.3~~, 402.7.1, 406.3.13, 508.3, 508.4 and 508.7.

Exception: Generator rooms shall be considered as an accessory use.

406.3.6 Area and height increases. The allowable area and height of open parking garages shall be increased in accordance with the provisions of this section. Garages with sides open on three-fourths of the building perimeter are permitted to be increased by 25 percent in area and one tier in height. Garages with sides open around the entire building perimeter are permitted to be increased 50 percent in area and one tier in height. For a side to be considered open under the above provisions, the total area of openings along the side shall not be less than 50 percent of the interior area of the side at each tier, and such openings shall be equally distributed along the length of the tier.

Allowable tier areas in Table 406.3.5 shall be increased for open parking garages constructed to heights less than the table maximum. The gross tier area of the garage shall not exceed that permitted for the higher structure. At least three sides of each such larger tier shall have continuous horizontal openings not less than 30 inches (762 mm) in clear height extending for at least 80 percent

of the length of the sides, and no part of such larger tier shall be more than 200 feet (60 960 mm) horizontally from such an opening. In addition, each such opening shall face a street or yard accessible to a street with a width of at least 30 feet (9144 mm) for the full length of the opening, and standpipes shall be provided in each such tier.

Open parking garages of Type ~~IB and~~ II construction, with all sides open, shall be unlimited in allowable area where the height does not exceed 75 feet (22 860 mm). For a side to be considered open, the total area of openings along the side shall not be less than 50 percent of the interior area of the side at each tier, and such openings shall be equally distributed along the length of the tier. All portions of tiers shall be within 200 feet (60 960 mm) horizontally from such openings or other natural ventilation openings as defined in Section 406.3.3.1. These openings shall be permitted to be provided in courts with a minimum width of 30 feet (9 144 mm) for the full width of the openings.

406.3.7 ~~Location on property~~ Fire separation distance. Exterior walls and openings in exterior walls shall comply with Tables 601 and 602. The distance ~~from~~ to an adjacent ~~lot~~ property line shall be determined in accordance with Table 602 and Section 704.

406.3.11 DELETE AND RESERVE.

406.4.1 Heights and areas. Enclosed vehicle parking garages and portions thereof that do not meet the definition of open parking garages shall be limited to the allowable heights and areas specified in Table 503 as modified by Sections 504, 506, and 507. Roof parking is permitted.

406.4.2 Ventilation. A mechanical ventilation system shall be provided in accordance with the ~~*International*~~ *Mechanical Code*.

Exception: Garages that provide openings as required in Section 406.3.3.1.

406.5.2.1 Canopies used to support gaseous hydrogen systems. Canopies which are used to shelter dispensing operations where flammable compressed gases are located on the roof of the canopy shall be in accordance with the following:

1. The canopy shall meet or exceed Type I construction requirements.
2. Operations located under canopies shall be limited to refueling only.
3. The canopy shall be constructed in a manner that prevents the accumulation of hydrogen gas.

406.6.1 General. A repair garage is a building or structure, or a portion thereof, utilized for servicing or repairing motor vehicles. Repair garages shall be constructed in accordance with the ~~*International*~~ *Fire Code* and this section. This occupancy shall not include motor fuel-dispensing facilities, as regulated in Section 406.5.

407.3 Corridor walls. Corridor walls shall be constructed as smoke partitions in accordance with Section 710.

407.6 Automatic fire detection. Corridors in nursing homes (both intermediate-care and skilled nursing facilities), detoxification facilities and spaces permitted to be open to corridors by Section 407.2 shall be ~~protected by~~ equipped with an automatic fire detection system ~~installed in accordance with Section 907~~. Hospitals shall be equipped with smoke detection as required in Section 407.2.

Exceptions:

1. Corridor smoke detection is not required where patient sleeping units are provided with smoke detectors that comply with UL 268. Such detectors shall provide a visual display on the

corridor side of each patient sleeping unit and an audible and visual alarm at the nursing station attending each unit.

2. Corridor smoke detection is not required where patient sleeping unit doors are equipped with automatic door-closing devices with integral smoke detectors on the unit sides installed in accordance with their listing, provided that the integral detectors perform the required alerting function.

408.3.6 ~~Vertical e~~ Exit enclosures. One of the required ~~vertical~~ exit enclosures in each building shall be permitted to have glazing installed in doors and interior walls at each landing level providing access to the enclosure, provided that the following conditions are met:

1. The ~~vertical~~ exit enclosure shall not serve more than four floor levels.
2. ~~Vertical e~~ Exit ~~enclosure~~ doors shall not be less than 3/4-hour fire doors complying with Section 715.3.
3. The total area of glazing at each floor level shall not exceed 5,000 square inches (3.23 m^2) and individual panels of glazing shall not exceed 1,296 square inches (0.84 m^2).
4. The glazing shall be protected on both sides by an automatic fire sprinkler system. The sprinkler system shall be designed to wet completely the entire surface of any glazing affected by fire when actuated.
5. The glazing shall be in a gasketed frame and installed in such a manner that the framing system will deflect without breaking (loading) the glass before the sprinkler system operates.
6. Obstructions, such as curtain rods, drapery traverse rods, curtains, drapes or similar materials shall not be installed between the automatic sprinklers and the glazing.

408.6 Smoke barrier. Occupancies in Group I-3 shall have smoke barriers complying with Section 709 to divide every story occupied by residents for sleeping, or any other story having an occupant load of 50 or more persons, into at least two smoke compartments.

Exception: Spaces having direct exit to one of the following, provided that the locking arrangement of the doors involved complies with the requirements for doors at the ~~compartment~~ smoke barrier for the use condition involved:

1. A public way.
2. A building separated from the resident housing area by a 2-hour fire-resistance-rated assembly or 50 feet (15 240 mm) of open space.
3. A secured yard or court having a holding space 50 feet (15 240 mm) from the housing area that provides 6 square feet (0.56 m^2) or more of refuge area per occupant, including residents, staff and visitors.

408.7.1 Occupancy Conditions 3 and 4. Each sleeping area in Occupancy Conditions 3 and 4 shall be separated from the adjacent common spaces by a smoke-tight partition where the travel distance from the sleeping area through the common space to the ~~exit access~~ corridor exceeds 50 feet (15 240 mm).

408.7.2 Occupancy Condition 5. Each sleeping area in Occupancy Condition 5 shall be separated from adjacent sleeping areas, corridors and common spaces by a smoke-tight partition. Additionally, common spaces shall be separated from the ~~exit access~~ corridor by a smoke-tight partition.

***410.2 Definitions.** The following words and terms shall, for the purposes of this section and as used elsewhere in this code, have the meanings shown herein.

STAGE. A space within a building utilized for entertainment or presentations, which includes overhead hanging curtains, drops, scenery or stage effects other than lighting and sound. ~~Stage area shall be measured to include the entire performance area and adjacent backstage and support areas not separated from the performance area by fire-resistance-rated construction. Stage height shall be measured rom the lowest point on the stage floor to the highest point of the roof or floor deck above the stage.~~

***NOTE: ALL OTHER PORTIONS OF THIS SECTION 410.2 TO REMAIN AS SET FORTH IN THE 2003 INTERNATIONAL BUILDING CODE.**

410.3.5 Proscenium curtain. ~~The proscenium opening of every stage with a height greater than 50 feet (15 240 mm)~~ Where a proscenium wall is required to have a fire-resistance rating, the stage opening shall be provided with a fire curtain of approved material or an approved water curtain complying with Section 903.3.1.1. The fire curtain shall be designed and installed to intercept hot gases, flames and smoke, and to prevent a glow from a severe fire on the stage from showing on the auditorium side for a period of 20 minutes. The closing of the fire curtain from the full open position shall be ~~effected~~ accomplished in less than 30 seconds, ~~but~~ with the last 8 feet (2438 mm) of travel ~~shall require not less than~~ requiring 5 or more seconds for full closure.

410.3.6 Scenery. Combustible materials used in sets and scenery shall ~~be rendered flame resistant~~ meet the fire propagation performance criteria of NFPA 701, in accordance with Section 805 and the ~~International~~ Fire Code. Foam plastics and materials containing foam plastics shall comply with Section 2603 and the ~~International~~ Fire Code.

410.5.1 Separation from stage. Where the stage height is greater than 50 feet (15 240 mm), the stage shall be separated from dressing rooms, scene docks, property rooms, workshops, storerooms and compartments appurtenant to the stage and other parts of the building by ~~a~~ fire barriers ~~wall and horizontal assemblies, or both,~~ with not less than a 2-hour fire-resistance rating with approved opening protectives. For stage heights of 50 feet (15 240 mm) or less, the required stage separation shall be ~~a~~ fire barriers ~~wall and horizontal assemblies, or both~~, with not less than a 1-hour fire-resistance rating with approved opening protectives.

410.5.2 Separation from each other. Dressing rooms, scene docks, property rooms, workshops, storerooms and compartments appurtenant to the stage shall be separated from each other by fire barriers ~~wall and horizontal assemblies, or both,~~ with not less than a 1-hour fire-resistance rating with approved opening protectives.

410.5.3 ~~Opening protectives.~~ ~~Openings other than to trunk rooms and the necessary doorways at stage level shall not connect such rooms with the stage, and such openings shall be protected with fire door assemblies that comply with Section 715.~~

~~410.5.4~~ Stage exits. At least one approved means of egress shall be provided from each side of the stage; and from each side of the space under the stage. At least one means of escape shall be provided from each fly gallery and from the gridiron. A steel ladder, alternating tread stairway or spiral stairway is permitted to be provided from the gridiron to a scuttle in the stage roof.

[F] 410.6 Automatic sprinkler system. Stages shall be equipped with an automatic fire-extinguishing system in accordance with Chapter 9. ~~The system~~ Sprinklers shall be installed under the roof and gridiron and under all catwalks and galleries over the stage.~~, in the tie and fly galleries, in places behind the proscenium wall of the stage, and~~ Sprinklers shall be installed in dressing rooms, performer lounges, ~~work~~shops and storerooms accessory to such stages.

Exceptions:

1. Sprinklers are not required under stage areas less than 4 feet (1219 mm) in clear height utilized exclusively for storage of tables and chairs, provided the concealed space is separated from the adjacent spaces by not less than 5/8-inch (15.9 mm) Type X gypsum board.
2. Sprinklers are not required for stages 1,000 square feet (93 m^2) or less in area and 50 feet (15 240 mm) or less in height where curtains, scenery or other combustible hangings are not retractable vertically. Combustible hangings shall be limited to a single main curtain, borders, legs and a single backdrop.
3. Sprinklers are not required within portable orchestra enclosures on stages.

***TABLE 412.1.2**
HEIGHT AND AREA LIMITATIONS FOR AIRPORT TRAFFIC CONTROL TOWERS

TYPE OF CONSTRUCTION	HEIGHT[a] (feet)	MAXIMUM AREA (square feet)
IA	Unlimited	1,500
IB	240	1,500
IIA	100	1,500
IIB	85	1,500
IIIA	65	1,500

For SI: 1 foot = 304.8 mm, 1 square foot = 0.093 m^2.
a. Height to be measured from grade plane to cab floor.

***NOTE: NO CHANGE TO THE TABLE**

412.2.3 Floor surface. Floors shall be graded and drained to prevent water or fuel from remaining on the floor. Floor drains shall discharge through an oil separator to the sewer or to an outside vented sump.

Exception: Aircraft hangars with individual lease spaces not exceeding 2,000 square feet (186 m^2) each in which servicing, repairing or washing is not conducted, and in which fuel is not dispensed, shall have floors that are graded toward the door, but shall not require a separator.

412.2.4 Heating equipment. Heating equipment shall be placed in another room separated by 2-hour fire-resistance-rated construction. Entrance shall be from the outside or by means of a vestibule providing a two-doorway separation.

Exceptions:

1. Unit heaters and vented infrared radiant equipment suspended at least 10 feet (3048 mm) above the upper surface of wings or engine enclosures of the highest aircraft that are permitted to be housed in the hangar and at least 8 feet (2438 mm) above the floor in shops, offices and other sections of the hangar communicating with storage or service areas.
2. A single interior door shall be allowed, provided the sources of ignition in the appliances are at least 18 inches (457 mm) above the floor.

412.3.2 Fire separation. A hangar shall not be attached to a dwelling unless separated by ~~walls~~ a fire barrier having a fire-resistance rating of not less than 1 hour. Such separation shall be continuous from the foundation to the underside of the roof and unpierced except for doors leading to the dwelling unit. Doors into the dwelling unit must be equipped with self-closing devices and conform to the requirements of Section 715 with at least a 4-inch (102 mm) noncombustible raised sill. Openings from a hangar directly into a room used for sleeping purposes shall not be permitted.

412.5.1 General. Heliports and helistops ~~may~~ shall not be erected on buildings or other locations unless ~~where~~ they are constructed in accordance with this section and all other applicable laws and ordinances.

412.5.3 Size. The ~~touchdown or~~ landing area for helicopters ~~of~~ less than 3,500 pounds (1588 kg) shall be a minimum of 20 feet (6096 mm) in length and width. The ~~touchdown~~ landing area shall be surrounded on all sides by a clear area having a minimum average width at roof level of 15 feet (4572 mm) but with no width less than 5 feet (1524 mm).

412.5.5 Means of egress. The means of egress from heliports and helistops shall comply with the provisions of Chapter 10, except no stairwell, stairway, guardrail or other structure shall be required or allowed to penetrate the take-off and landing area specified for the helistop. All ~~L~~ landing areas located on buildings or structures shall have two or more means of egress. For landing platforms or roof areas less than 60 feet (18 288 mm) in length, or less than 2,000 square feet (187 m^2) in area, the second means of egress may be a fire escape or ladder leading to the floor below.

414.2.1 Construction requirements. Control areas shall be separated from each other by ~~not less than a 1-hour~~ fire barriers constructed in accordance with ~~Chapter 7~~ Section 706.

[F] TABLE 414.2.2
DESIGN AND NUMBER OF CONTROL AREAS

FLOOR LEVEL		PERCENTAGE OF THE MAXIMUM ALLOWABLE QUANTITY PER CONTROL AREA[a]	NUMBER OF CONTROL AREAS PER FLOOR [~~b~~]	FIRE-RESISTANCE RATING FOR FIRE BARRIERS IN HOURS [~~c~~ b]
Above grade plane	Higher than 9	5	1	2
	7-9	5	2	2
	6	12.5	2	2
	5	12.5	2	2
	4	12.5	2	2
	3	50	2	1
	2	75	3	1
	1	100	4	1
Below grade plane	1	75	3	1
	2	50	2	1
	Lower than 2	Not allowed	Not allowed	Not allowed

a. Percentages shall be of the maximum allowable quantity per control area shown in Tables 307.7(1) and 307.7(2), with all increases allowed in the notes to those tables.

b. ~~There shall be a maximum of two control areas per floor in Group M occupancies and in buildings or portions of buildings having Group S occupancies with storage conditions and quantities in accordance with Section 414.2.4.~~

~~c.~~ Fire barriers shall include walls and floors as necessary to provide separation from other portions of the building.

414.2.3 ~~Separation~~ Fire-resistance rating requirements. The required fire-resistance rating for fire barrier assemblies shall be in accordance with Table 414.2.2. The floor construction of the control area, and the construction supporting the floor of the control area, shall have a minimum 2-hour fire-resistance rating.

414.6.1 Weather protection. Where weather protection is provided for sheltering outdoor hazardous material storage or use areas, such storage or use shall be considered outdoor storage or use~~, provided that all of the following conditions are met:~~ when the weather protection structure complies with Section 414.6.1.1 through 414.6.1.4.

~~1. Structure supports and walls shall not obstruct more than one side nor more than 25 percent of the perimeter of the storage or use area.~~

~~2. The distance from the structure and the structure supports to buildings, lot lines, public ways or means of egress to a public way shall not be less than the distance required for an outside hazardous material storage or use area without weather protection.~~

~~3. The overhead structure shall be of approved noncombustible construction with a maximum area of 1,500 square feet (140 m²).~~

~~**Exception:** The increases permitted by Section 506 apply.~~

414.6.1.1 Walls. Walls shall not obstruct more than one side of the structure.

Exception: Walls shall be permitted to obstruct portions of multiple sides of the structure provided that the obstructed area does not exceed 25 percent of the structure's perimeter.

414.6.1.2 Separation distance. The distance from the structure to buildings, lot lines, public ways or means of egress to a public way shall not be less than the distance required for an outside hazardous material storage or use area without weather protection.

414.6.1.3 Noncombustible construction. The overhead structure shall be of noncombustible construction.

414.6.1.4 Classification. The structure shall be classified in the appropriate Group H occupancy only for the purposes of determining maximum allowable area according to Table 503, including increases as provided in Section 506.

***415.2 Definitions.** The following words and terms shall, for the purposes of this chapter and as used elsewhere in the code, have the meanings shown herein.

PHYSIOLOGICAL WARNING THRESHOLD LEVEL. A concentration of airborne contaminants, normally expressed in parts per million (ppm) or milligrams per cubic meter, that represents the concentration at which persons can sense the presence of the contaminant due to odor, irritation or other quick-acting physiological response. When used in conjunction with the Permissible Exposure Limit (PEL) the physiological warning threshold levels are those consistent with the classification system used to establish the PEL. See the definition of Permissible Exposure Limit (PEL).

***NOTE: ALL OTHER PORTIONS OF THIS SECTION 415.2 TO REMAIN AS SET FORTH IN THE 2003 INTERNATIONAL BUILDING CODE.**

415.3 ~~Location on property~~ Fire separation distance. Group H shall be located on property in accordance with the other provisions of this chapter. In Groups H-2 ~~or~~ and H-3, not less than 25 percent of the perimeter wall of the occupancy shall be an exterior wall.

Exceptions:

1. Liquid use, dispensing and mixing rooms having a floor area of not more than 500 square feet (46.5 m^2) need not be located on the outer perimeter of the building where they are in accordance with the ~~*International*~~ *Fire Code* and NFPA 30.
2. Liquid storage rooms having a floor area of not more than 1,000 square feet (93 m^2) need not be located on the outer perimeter where they are in accordance with the ~~*International*~~ *Fire Code* and NFPA 30.
3. Spray paint booths that comply with the ~~*International*~~ *Fire Code* need not be located on the outer perimeter.

415.3.1 Group H occupancy minimum fire separation distance ~~to lot lines~~. Regardless of any other provisions, buildings containing Group H occupancies shall be set back a minimum fire separation distance ~~from lot lines~~ as set forth in Items 1 through 4 below. Distances shall be measured from the walls enclosing the occupancy to lot lines, including those on a public way. Distances to assumed ~~property~~ lot lines ~~drawn~~ established for the purposes of determination of exterior wall and opening protection are not to be used to establish the minimum fire separation distance for ~~separation of~~ buildings on sites where explosives are manufactured or used when separation is provided in accordance with the quantity distance tables specified for explosive materials in the ~~*International*~~ *Fire Code*.

1. Group H-1. Not less than 75 feet (22 860 mm) and not less than required by the ~~*International*~~ *Fire Code*.

Exceptions:

1. Fireworks manufacturing buildings separated in accordance with NFPA 1124.
2. Buildings containing the following materials when separated in accordance with Table 415.3.1:

2.1. Organic peroxides, unclassified detonable.

2.2. Unstable reactive materials Class 4.

2.3. Unstable reactive materials, Class 3 detonable.

2.4. Detonable pyrophoric materials.

2. Group H-2. Not less than 30 feet (9144 mm) where the area of the occupancy exceeds 1,000 square feet (93 m^2), and it is not required to be located in a detached building.

3. Groups H-2 and H-3. Not less than 50 feet (15 240 mm) where a detached building is required (see Table 415.3.2).

4. Groups H-2 and H-3. Occupancies containing materials with explosive characteristics shall be separated as required by the ~~*International*~~ *Fire Code*. Where separations are not specified, the distances required shall not be less than the distances required by Table 415.3.1.

415.3.2 Group H-1 and H-2 or H-3 detached buildings. Where a detached building is required by Table 415.3.2, there are no requirements for wall and opening protection based on ~~location on property~~ fire separation distance.

415.6 Smoke and heat venting. Smoke and heat vents complying with Section 910 shall be installed in occupancies classified as Group H-2 or H-3, having more than 15,000 square feet (1394 m^2) in single floor area. ~~the following locations:~~

~~1. In occupancies classified as Group H-2 or H-3, any of which are over 15,000 square feet (1394 m^2) in single floor area.~~

Exception: Buildings of noncombustible construction containing only noncombustible materials.

~~2. In areas of buildings in Group H used for storing Class 2, 3 and 4 liquid and solid oxidizers, Class 1 and unclassified detonable organic peroxides, Class 3 and 4 unstable (reactive) materials, or Class 2 or 3 water-reactive materials as required for a Class V hazard classification.~~

~~**Exception:** Buildings of noncombustible construction containing only noncombustible materials.~~

415.7.1.2 Grinding rooms. Every room or space occupied for grinding or other operations that produce combustible dusts shall be enclosed with fire barriers ~~and horizontal assemblies or both~~ that have not less than a 2-hour fire-resistance rating where the area is not more than 3,000 square feet (279 m^2), and not less than a 4-hour fire-resistance rating where the area is greater than 3,000 square feet (279 m^2).

415.7.3.4.1 Fire separation assemblies. Separation of the attached structures shall be provided by fire barriers ~~walls and horizontal assemblies, or both,~~ having a fire-resistance rating of not less than 1 hour and shall not have openings. Fire barriers ~~walls and horizontal assemblies, or both,~~ between attached structures occupied only for the storage of LP-gas are permitted to have fire doors that comply with Section 715. Such fire barriers ~~walls and horizontal assemblies, or both,~~ shall be designed to withstand a static pressure of at least 100 pounds per square foot (psf) (4788 Pa), except where the building to which the structure is attached is occupied by operations or processes having a similar hazard.

415.7.3.5.2 Common construction. Walls and floor/ceiling assemblies common to the room and to the building within which the room is located shall ~~have a~~ be fire barriers ~~wall and horizontal assembly or both of~~ with not less than a 1-hour fire resistance rating and without openings. Common walls for rooms occupied only for storage of LP-gas are permitted to have opening protectives complying with Section 715. ~~Such~~ The walls and ceilings shall be designed to withstand a static pressure of at least 100 psf (4788 Pa).

Exception: Where the building, within which the room is located, is occupied by operations or processes having a similar hazard.

415.8.3 Separation—highly toxic solids and liquids. Highly toxic solids and liquids not stored in approved hazardous materials storage cabinets shall be isolated from other hazardous materials storage by a fire barrier ~~construction~~ having a ~~1-hour~~ fire-resistance rating of not less than 1 hour.

415.9.2.2 Separation. Fabrication areas, whose sizes are limited by the quantity of hazardous materials allowed by Table 415.9.2.1.1, shall be separated from each other, from ~~exit access~~ corridors, and from other parts of the building by not less than 1-hour fire barriers.

Exceptions:

1. Doors within such fire barrier walls, including doors to corridors, shall be only self-closing fire assemblies having a fire-protection rating of not less than 3/4 hour.
2. Windows between fabrication areas and ~~exit access~~ corridors are permitted to be fixed glazing listed and labeled for a fire protection rating of at least 3/4 hour in accordance with Section 715.

415.9.2.6 Ventilation. Mechanical exhaust ventilation shall be provided throughout the fabrication area at the rate of not less than 1 cubic foot per minute per square foot (0.044 L/S/m^2) of floor area. The exhaust air duct system of one fabrication area shall not connect to another duct system outside that fabrication area within the building.

A ventilation system shall be provided to capture and exhaust gases, fumes and vapors at workstations.

Two or more operations at a workstation shall not be connected to the same exhaust system where either one or the combination of the substances removed could constitute a fire, explosion or hazardous chemical reaction within the exhaust duct system.

Exhaust ducts penetrating occupancy separations shall be contained in a shaft of equivalent fire-resistance-rated construction. Exhaust ducts shall not penetrate fire walls.

Fire dampers shall not be installed in exhaust ducts.

415.9.2.7 Transporting hazardous production materials to fabrication areas. Hazardous production materials shall be transported to fabrication areas through enclosed piping or tubing systems that comply with Section 415.9.6.1, through service corridors complying with Section 415.9.4, or in ~~exit access~~ corridors as permitted in the exception to Section 415.9.3. The handling or transporting of hazardous production materials within service corridors shall comply with the ~~*International*~~ *Fire Code*.

415.9.3 ~~Exit access c~~Corridors. ~~Exit access c~~Corridors shall comply with Chapter 10 and shall be separated from fabrication areas as specified in Section 415.9.2.2. ~~Exit access c~~Corridors shall not contain HPM and shall not be used for transporting such materials, except through closed piping systems as provided in Section 415.9.6.3.

Exception: Where existing fabrication areas are altered or modified, HPM is allowed to be transported in existing ~~exit access~~ corridors, subject to the following conditions:

1. Corridors. ~~Exit access c~~Corridors adjacent to the fabrication area where the alteration work is to be done shall comply with Section 1016 for a length determined as follows:

   1.1. The length of the common wall of the corridor and the fabrication area; and

   1.2. For the distance along the ~~exit access~~ corridor to the point of entry of HPM into the ~~exit access~~ corridor serving that fabrication area.

2. Emergency alarm system. There shall be an emergency telephone system, a local manual alarm station or other approved alarm-initiating device within ~~exit access~~ corridors at not more than 150-foot (45 720 mm) intervals and at each exit and ~~exit access~~ doorway. The signal shall be relayed to an approved central, proprietary or remote station service or the emergency control station and shall also initiate a local audible alarm.

3. Pass-throughs. Self-closing doors having a fire-protection rating of not less than 1 hour shall separate pass-throughs from existing ~~exit access~~ corridors. Pass-throughs shall be constructed as required for the ~~exit access~~ corridors, and protected by an approved automatic fire-extinguishing system.

415.9.4.2 Use conditions. Service corridors shall be separated from ~~exit access~~ corridors as required by Section 415.9.2.2. Service corridors shall not be used as a required ~~exit access~~ corridor.

415.9.6.3 Installations in ~~exit access~~ corridors and above other occupancies. The installation of hazardous production material piping and tubing within the space defined by the walls of ~~exit access~~ corridors and the floor or roof above or in concealed spaces above other occupancies shall be in accordance with Section 415.9.6.2 and the following conditions:

1. Automatic sprinklers shall be installed within the space unless the space is less than 6 inches (152 mm) in the least dimension.

2. Ventilation not less than six air changes per hour shall be provided. The space shall not be used to convey air from any other area.

3. Where the piping or tubing is used to transport HPM liquids, a receptor shall be installed below such piping or tubing. The receptor shall be designed to collect any discharge or leakage and drain it to an approved location. The 1-hour enclosure shall not be used as part of the receptor.

4. HPM supply piping and tubing and HPM nonmetallic waste lines shall be separated from the ~~exit access~~ corridor and from occupancies other than Group H-5 by fire barriers ~~construction as required for walls or partitions~~ that have a fire protection rating of not less than 1 hour. Where gypsum wallboard is used, joints on the piping side of the enclosure are not required to be taped, provided the joints occur over framing members. Access openings into the enclosure shall be protected by approved fire-~~resistance~~ protection-rated assemblies.

5. Readily accessible manual or automatic remotely activated fail-safe emergency shutoff valves shall be installed on piping and tubing other than waste lines at the following locations:

   5.1. At branch connections into the fabrication area.

5.2. At entries into ~~exit access~~ corridors.

Exception: Transverse crossings of the corridors by supply piping that is enclosed within a ferrous pipe or tube for the width of corridor need not comply with Items 1 through 5.

415.9.7 Continuous gas-detection systems. A continuous gas-detection system shall be provided for HPM gases when the physiological warning threshold level ~~properties~~ of the gas ~~are~~ is at a higher level than the accepted permissible exposure limit (PEL) for the gas and for flammable gases in accordance with this section.

415.9.7.1.4 ~~Exit access c~~Corridors. When gases are transported in piping placed within the space defined by the walls of a ~~an exit access~~ corridor, and the floor or roof above the ~~exit access~~ corridor, a continuous gas-detection system shall be provided where piping is located and in the ~~exit access~~ corridor.

Exception: A continuous gas-detection system is not required for occasional transverse crossings of the corridors by supply piping that is enclosed in a ferrous pipe or tube for the width of the corridor.

415.9.9 Emergency control station. An emergency control station shall be provided on the premises at an approved location~~,~~ outside of the fabrication area, and shall be continuously staffed by trained personnel. The emergency control station shall receive signals from emergency equipment and alarm and detection systems. Such emergency equipment and alarm and detection systems shall include, but not ~~necessarily~~ be limited to, the following where such equipment or systems are required to be provided either in ~~Section 415.9~~ this chapter or elsewhere in this code:

1. Automatic fire sprinkler system alarm and monitoring systems.
2. Manual fire alarm systems.
3. Emergency alarm systems.
4. Continuous gas-detection systems.
5. Smoke detection systems.
6. Emergency power system.
7. Automatic detection and alarm systems for pyrophoric liquids and Class 3 water reactive liquids required in Section 1805.2.2.4 of the Fire Code.
8. Exhaust ventilation flow alarm devices for pyrophoric liquids and Class 3 water reactive liquids cabinet exhaust ventilation systems required in Section 1805.2.2.4 of the Fire Code.

415.9.10.1 ~~Where r~~Required electrical systems. Emergency power shall be provided for electrically operated equipment and connected control circuits for the following systems:

1. HPM exhaust ventilation systems.
2. HPM gas cabinet ventilation systems.
3. HPM exhausted enclosure ventilation systems.
4. HPM gas room ventilation systems.
5. HPM gas detection systems.
6. Emergency alarm systems.

7. Manual fire alarm systems.

8. Automatic sprinkler system monitoring and alarm systems.

9. ~~Electrically operated systems required elsewhere in this code applicable to the use, storage or handling of HPM.~~ Automatic alarm and detection systems for pyrophoric liquids and Class 3 water reactive liquids required in Section 1805.2.2.4 of the Fire Code.

10. Flow alarm switches for pyrophoric liquids and Class 3 water reactive liquids cabinet exhaust ventilation systems required in 1805.2.2.4 of the Fire Code.

11. Electrically operated systems required elsewhere in this code or in the Fire Code applicable to the use, storage or handling of HPM.

415.9.11.1 ~~General e~~Exhaust ducts for HPM. An approved ~~A~~automatic ~~fire~~ sprinkler system ~~protection~~ shall be provided in exhaust ducts conveying gases, vapors, fumes, mists or dusts generated from HPM in accordance with this section and the ~~*International*~~ *Mechanical Code*.

415.9.11.2 Metallic and noncombustible, nonmetallic exhaust ducts. An approved ~~A~~automatic ~~fire~~ sprinkler system ~~protection~~ shall be provided in metallic and noncombustible, nonmetallic exhaust ducts where all of the following conditions apply:

1. Where the largest cross-sectional diameter is equal to or greater than 10 inches (254 mm).
2. The ducts are within the building.
3. The ducts are conveying flammable gases, vapors or fumes.

416.3 Spraying ~~spaces~~ areas. Spraying ~~spaces~~ areas shall be ventilated with an exhaust system to prevent the accumulation of flammable mist or vapors in accordance with the ~~*International*~~ *Mechanical Code*. Where such ~~spaces~~ areas are not separately enclosed, noncombustible spray curtains shall be provided to restrict the spread of flammable vapors.

416.3.1 Surfaces. The interior surfaces of spraying ~~spaces~~ areas shall be smooth and continuous without edges, and shall be so constructed to permit the free passage of exhaust air from all parts of the interior and to facilitate washing and cleaning, and shall be so designed to confine residues within the spraying ~~space~~ area. Aluminum shall not be used.

416.4 Fire protection. An automatic fire-extinguishing system shall be provided in all spray, dip and immersing ~~spaces~~ areas and storage rooms, and shall be installed in accordance with Chapter 9.

SECTION 419
GROUP I-1, R-1, R-2, R-3

419.1 General. Occupancies in Group I-1, R-1, R-2 and R-3 shall comply with the provisions of this section and other applicable provisions of this code.

419.2 Separation walls. Walls separating dwelling units in the same building and walls separating sleeping units in the same building shall comply with Section 708.

419.3 Horizontal separation. Floor ceiling assemblies separating dwelling units in the same buildings and floor ceiling assemblies separating sleeping units in the same building shall be constructed as per Section 711.

SECTION 420
DAY CARE OCCUPANCIES

420.1 Classification. Adult and child day care occupancies shall be classified in accordance with Table 420.1 and Sections 305, 308 and 310 as applicable.

TABLE 420.1
CLASSIFICATION OF DAYCARE OCCUPANCIES

Characteristics			Occupancy Group					
Age	**No. of Persons**	**No. of hours per day**	**R-3**	**R-4**	**E[a]**	**I-4[b]**	**I-2**	**I-1**
2 ½ years old or younger	1-5	24	X					
		Less than 24	X					
	6 or more*	24					X	
		Less than 24			X (Exception 308.5.2)	X (Exception 308.5.1)		
More than 2 ½ years old	1-5	24	X					
		Less than 24	X					
	6-16	24		X				
		Less than 24			X (Age limit 12th grade)	X (No age limit)		
	17 or more*	24						X
		Less than 24			X (Age limit 12th grade)	X (No age limit)		

a. Group E child care is limited to 100 children max.
b. An adult day care facility where occupants are capable of responding to an emergency situation without physical assistance from the staff shall be classified as an A-3.

CHAPTER 5

GENERAL BUILDING HEIGHTS AND AREAS

[F] 501.2 Premises identification. Approved numbers or addresses shall be provided for new buildings under construction in such a position as to be clearly visible and legible from the street or roadway fronting the property. Letters or numbers shall be a minimum 3 inches (76 mm) in height and stroke of minimum 0.5 inch (12.7 mm) of a contrasting color to the background itself. All new and existing buildings are required to be numbered as provided in Article V of Chapter 10 of the City Code.

502.1 Definitions. The following words and terms shall, for the purposes of this chapter and as used elsewhere in this code, have the meanings shown herein.

BASEMENT. That portion of a building that is partly or completely below grade plane (see "Story above grade plane" in Section 202). A basement shall be considered as a story above grade plane where the finished surface of the floor above the basement is:

1. More than 6 feet (1829 mm) above grade plane;

2. ~~More than 6 feet (1829 mm) above the finished ground level for more than 50 percent of the total building perimeter; or~~

3. More than 12 feet (3658 mm) above the finished ground level at any point.

~~**INDUSTRIAL**~~ **EQUIPMENT PLATFORM.** An unoccupied, elevated platform ~~in an industrial occupancy~~ used exclusively for mechanical systems or industrial process equipment, including the associated elevated walkways, stairs and ladders necessary to access the platform (see Section 505.5).

MEZZANINE. An intermediate level or levels between the floor and ceiling of any story ~~with an aggregate floor area of not more than one third of the area of the room or space in which the level or levels are located (see~~ and in accordance with Section 505~~)~~.

503.1.2 Special industrial occupancies. Buildings and structures designed to house ~~low hazard~~ special industrial processes that require large areas and unusual heights to accommodate craneways or special machinery and equipment including, among others, rolling mills; structural metal fabrication shops and foundries; or the production and distribution of electric, gas or steam power, shall be exempt from the height and area limitations of Table 503.

~~**503.2 Party walls.** Any wall located on a lot line between adjacent buildings, which is used or adapted for joint service between the two buildings, shall be constructed as a fire wall in accordance with Section 705, without openings and shall create separate buildings.~~

TABLE 503
ALLOWABLE HEIGHT AND BUILDING AREAS
Height limitations shown as stories and feet above grade plane.
Area limitations as determined by the definition of "Area, building," per ~~floor~~ story.

		TYPE OF CONSTRUCTION								
		TYPE I		TYPE II		TYPE III		TYPE IV	TYPE V	
		A	B	A	B	A	B	HT	A	B
	Hgt (feet)									
GROUP	Hgt (S)	UL	160	65	55	65	55	65	50	40
H-5	S	~~3~~ 4	~~3~~ 4	3	3	3	3	3	3	2
	A	UL	UL	37,500	23,000	28,500	19,000	36,000	18,000	9,000

{NOTE: ONLY CHANGED PORTION OF THE TABLE SHOWN, ALL OTHER PORTIONS REMAIN UNCHANGED}

504.1 General. The heights permitted by Table 503 shall only be increased in accordance with this section.

> **Exception:** The height of one-story aircraft hangars, aircraft paint hangars, aircraft repair hangers and buildings used for the manufacturing of aircraft shall not be limited if the building is provided with an automatic fire-extinguishing system in accordance with Chapter 9 and is entirely surrounded by public ways or yards not less in width than one ~~and one half~~ times the height of the building.

504.2 Automatic sprinkler system increase. Where a building is equipped throughout with an approved automatic sprinkler system in accordance with Section 903.3.1.1, the value specified in Table 503 for maximum height is increased by 20 feet (6096 mm) and the maximum number of stories is increased by one story. ~~These increases are permitted in addition to the area increase in accordance with Sections 506.2 and 506.3.~~ For Group R buildings equipped throughout with an approved automatic sprinkler system in accordance with Section 903.3.1.2, the value specified in Table 503 for maximum height is increased by 20 feet (6096 mm) and the maximum number of stories is increased by one story, but shall not exceed four stories or 60 feet (18 288 mm), respectively. These increases are permitted in addition to the area increase in accordance with Sections 506.2 and 506.3.

> **Exceptions:**
>
> 1. Fire areas with an occupancy in Group I-2 of Type IIB, III, IV or V construction.
>
> 2. Fire areas with an occupancy in Group H-1, H-2, H-3 or H-5.
>
> 3. Fire-resistance rating substitution in accordance with Table 601, Note d.

505.1 General. A mezzanine or mezzanines in compliance with ~~this~~ ~~s~~ Section 505 shall be considered a portion of the ~~floor~~ story below. Such mezzanines shall not contribute to either the building area or number of stories as regulated by Section 503.1. The area of the mezzanine shall be included in determining the fire area defined in Section 702. The clear height above and below the mezzanine floor construction shall not be less than 7 feet (2134 mm).

505.2 Area limitation. The aggregate area of a mezzanine or mezzanines within a room shall not exceed one-third of the floor area of that room or space in which they are located. The enclosed portions of rooms shall not be included in a determination of the ~~size~~ floor area of the room in which the mezzanine is located. In determining the allowable mezzanine area, the area of the mezzanine shall not be included in the floor area of the room.

Exceptions:

1. The aggregate area of mezzanines in buildings and structures of Type I or II construction for special industrial occupancies in accordance with Section 503.1.2 shall not exceed two-thirds of the floor area of the room.

2. In dwelling units of Group R occupancies, the enclosed portions of the dwelling unit in the level below the mezzanine shall be permitted to be included in determining of the floor area in which the mezzanine is located. The mezzanine shall not exceed one-third of the floor area.

3. The aggregate area of mezzanines in buildings and structures of Type I or II construction shall not exceed one-half of the area of the room in buildings and structures equipped throughout with an approved automatic sprinkler system in accordance with Section 903.3.1.1 and an approved emergency voice/alarm communication system in accordance with Section 907.2.12.2.

505.3 Egress. Each occupant of a mezzanine shall have access to at least two independent means of egress when required by Section 1014.1. ~~where the common path of egress travel exceeds the limitations of Section 1013.3.~~ Where a stairway provides a means of exit access from a mezzanine, the maximum travel distance includes the distance traveled on the stairway measured in the plane of the tread nosing.

~~**Exceptions:**~~

~~1. A single means of egress shall be permitted in accordance with Section 1014.1.~~

~~2. Accessible means of egress shall be provided in accordance with Section 1007.~~

505.4 Openness. A mezzanine shall be open and unobstructed to the room in which such mezzanine is located except for walls not more than 42 inches (1067 mm) high, columns and posts.

Exceptions:

1. Mezzanines or portions thereof are not required to be open to the room in which the mezzanines are located, provided that the occupant load of the aggregate area of the enclosed space does not exceed 10.

2. A mezzanine having two or more means of egress is not required to be open to the room in which the mezzanine is located, if at least one of the means of egress provides direct access to an exit from the mezzanine level.

3. Mezzanines or portions thereof are not required to be open to the room in which the mezzanines are located, provided that the aggregate floor area of the enclosed space does not exceed 10 percent of the mezzanine area.

4. In industrial facilities, mezzanines used for control equipment are permitted to be glazed on all sides.

5. ~~In Group F occupancies of unlimited area, meeting the requirements of Section 507.2 or 507.3, mezzanines or portions thereof are not required to be open to the room in which the mezzanines are located, provided that an approved fire alarm system is installed throughout the entire building or structure and notification appliances are installed throughout the mezzanines in accordance with the provisions of NFPA 72. In addition, the fire alarm system shall be initiated by automatic sprinkler water flow.~~ In other than Groups H and I occupancies no more than two stories in height above grade plane, and equipped throughout with an automatic sprinkler system in accordance with Section 903.3.1.1, a mezzanine having two or more means of egress shall not be required to be open to the room in which the mezzanine is located.

505.5 ~~Industrial e~~ Equipment platforms. ~~Industrial e~~ Equipment platforms in buildings shall not be considered as a portion of the floor below. Such equipment platforms shall not contribute to either the building area or the number of stories as regulated by Section 503.1. The area of the ~~industrial~~ equipment platform shall not be included in determining the fire area. ~~Industrial e~~ Equipment platforms shall not be a part of any mezzanine, and such platforms and the walkways, stairs and ladders providing access to an equipment platform shall not serve as a part of the means of egress from the building.

505.5.1 Area limitations. The aggregate area of all ~~industrial~~ equipment platforms within a room shall not exceed two-thirds of the area of the room in which they occur. Where an equipment platform is located in the same room as a mezzanine, the area of the mezzanine shall be determined by Section 505.2, and the combined aggregate area of the equipment platforms and mezzanines shall not exceed two-thirds of the room in which they occur.

505.5.2 Fire suppression. Where located in a building that is required to be protected by an automatic sprinkler system, ~~industrial~~ equipment platforms shall be fully protected by sprinklers above and below the platform, where required by the standards referenced in Section 903.3.

506.1 General. The areas limited by Table 503 shall be permitted to be increased due to frontage (*If*) and automatic sprinkler system protection (I_s) in accordance with the following:
{DELETE EQUATION 5-1}

$A_a = \{A_t + [A_t \times I_f] + [A_t \times I_s]\}$ **(Equation 5-1)**

where:

A^a = Allowable area per ~~floor~~ story (square feet)

A^t = Tabular area per ~~floor~~ story in accordance with Table 503 (square feet).

If = Area increase factor due to frontage ~~(percent)~~ as calculated in accordance with Section 506.2.

I^s = Area increase factor due to sprinkler protection ~~(percent)~~ as calculated in accordance with Section 506.3.

506.1.1 Basements. A single basement need not be included in the total allowable area provided such basement does not exceed the area permitted for a ~~one-story~~ building with no more than one story above grade plane.

506.2 Frontage increase. Every building shall adjoin or have access to a public way to receive an area increase for frontage. Where a building has more than 25 percent of its perimeter on a public way or open space having a minimum width of 20 feet (6096 mm), the frontage increase shall be determined in accordance with the following:

{DELETE EQUATION 5-2}

I_f = [F / P - 0.25] W / 30 **(Equation 5-2)**

where:

I_f = Area increase due to frontage.

F = Building perimeter which fronts on a public way or open space having 20 feet (6096 mm) open minimum
width (feet).

P = Perimeter of entire building (feet).

W = Width of public way or open space (feet) in accordance with Section 506.2.1.

506.2.1 Width limits. *W* must be at least 20 feet (6096 mm). ~~and the quantity *W* divided by 30 shall not exceed 1.0.~~ Where the value of *W* varies along the perimeter of the building, the calculation performed in accordance with Equation 5-2 shall be based on the weighted average of each portion of exterior wall and open space where the value of *W* is ~~between~~ greater than or equal to 20 ~~and 30 feet~~ (6096 ~~and 9144~~ mm). Where W exceeds 30 feet, a value of 30 feet shall be used in calculating the weighted average, regardless of the actual width of the space.

Exception: The quantity *W* divided by 30 shall be permitted to not exceed 2.0 when ~~all of the following conditions exist:~~ the building meets all requirements of Section 507 except for compliance with the 60-foot public way or yard requirement, as applicable.

~~1. The building is permitted to be unlimited in area by Section 507; and~~

~~2. The only provision preventing unlimited area is compliance with the 60-foot (18 288 mm) public way or yard requirement, as applicable.~~

506.3 Automatic sprinkler system increase. Where a building is protected throughout with an approved automatic sprinkler system in accordance with Sections 903.3.1.1 and 903.31.2 as applicable, the area limitation in Table 503 is permitted to be increased by an additional 200 percent (*Is* = 2 ~~200 percent~~) for ~~multistory~~ buildings with more than one story above grade plane and an additional 300 percent (*Is* = 3 ~~300 percent~~) for ~~single-story~~ buildings with no more than one story above grade plane. These increases are permitted in addition to the height and story increases in accordance with Section 504.2.

Exceptions:

1. Buildings with an occupancy in Group H-1, H-2 or H-3.

2. Fire-resistance rating substitution in accordance with Table 601, Note d.

506.4 Area determination. The maximum area of a building with more than one story shall be determined by multiplying the allowable area of the first ~~floor~~ story (*Aa*), as determined in Section 506.1, by the number of stories above grade plane as listed below.

1. For ~~two-story~~ buildings with two stories above grade plane, multiply by 2;

2. For ~~three-story or higher~~ buildings with three or more stories above grade plane, multiply by 3; and,

3. No story shall exceed the allowable area per ~~floor~~ story (*Aa*), as determined in Section 506.1 for the occupancies on that ~~floor~~ story.

Exceptions:

1. Unlimited area buildings in accordance with Section 507.

2. The maximum area of a building equipped throughout with an automatic sprinkler system in accordance with Section 903.3.1.2 shall be determined by multiplying the allowable area per ~~floor~~ story (*Aa*), as determined in Section 506.1 by the number of stories above grade plane.

506.4.1 Mixed occupancies. In buildings of mixed occupancy, the allowable area per story (Aa) shall be based on the most restrictive provisions for each occupancy when the mixed occupancies are treated according to Section 302.3.1. When the occupancies are treated according to Section 302.3.2 as separated occupancies, the maximum total building area shall be such that the sum of the ratios for each such area on all floors as calculated according to Section 302.3.2 shall not exceed 2 for two story buildings and 3 for buildings three stories or higher.

507.2 Sprinklered, one story. The area of a one-story, Group B, F, M or S building or a one-story Group A-4 building of other than Type V construction shall not be limited when the building is provided with an automatic sprinkler system throughout in accordance with Section 903.3.1.1, and is surrounded and adjoined by public ways or yards not less than 60 feet (18 288 mm) in width.

Exceptions:

1. Buildings and structures of Type I and II construction for rack storage facilities which do not have access by the public shall not be limited in height provided that such buildings conform to the requirements of Section 507.1, Section 903.3.1.1 and NFPA ~~231C~~ 230.
2. The automatic sprinkler system shall not be required in areas occupied for indoor participant sports, such as tennis, skating, swimming and equestrian activities, in occupancies in Group A-4, provided that:

   2.1. Exit doors directly to the outside are provided for occupants of the participant sports areas, and

   2.2. The building is equipped with a fire alarm system with manual fire alarm boxes installed in accordance with Section 907.

3. Group A-1 and A-2 occupancies of other than type V construction shall be permitted provided:

   3.1 All assembly occupancies are separated from other spaces as required for Separated Uses in Section 302.3.2, with no reduction allowed in the fire-resistance rating of the separation based upon the installation of an automatic sprinkler system,

3.2. Each group A occupancy shall not exceed the maximum allowable area permitted in Section 503.1, and

3.3. All required exits shall discharge directly to the exterior.

507.4 Reduced open space. The permanent open space of 60 feet (18 288 mm) required in Sections 507.1, 507.2, ~~and~~ 507.3, 507.5 and 507.9 shall be permitted to be reduced to not less than 40 feet (12 192 mm) provided the following requirements are met:

1. The reduced open space shall not be allowed for more than 75 percent of the perimeter of the building.

2. The exterior wall facing the reduced open space shall have a minimum fire-resistance rating of 3 hours.

3. Openings in the exterior wall, facing the reduced open space, shall have opening protectives with a minimum fire-~~resistance~~ protection rating of 3 hours.

507.6 ~~High-hazard use groups~~ Group H occupancies. Group H-2, H-3 and H-4 occupancies ~~fire areas~~ shall be permitted in unlimited area buildings containing ~~having occupancies in~~ Groups F and S occupancies, in accordance with Sections 507.2 and 507.3 and the limitations of this section. The aggregate floor area of Group H occupancies ~~Fire areas~~ located at the perimeter of the unlimited area building shall not exceed 10 percent of the area of the building nor the area limitations for the Group H occupancies as specified in Table 503 as modified by Section 506.2, based upon the percentage of the perimeter of each Group H the fire area that fronts on a street or other unoccupied space. ~~Other fire areas~~ The aggregate floor area of Group H occupancies not located at the perimeter of the building shall not exceed 25 percent of the area limitations for the Group H occupancies as specified in Table 503. ~~Fire-resistance rating requirements of fire barrier assemblies shall be in accordance with~~ Group H fire areas shall be separated from the rest of the unlimited area building and from each other in accordance with Table 302.3.~~3~~ 2. For two story unlimited area buildings, the Group H fire areas shall not be located above the first story unless permitted by the allowable height in stories and feet as set forth in Table 503 based on the type of construction of the unlimited area building.

507.9 Motion picture theaters. In buildings of Type ~~I or~~ II construction, the area of one-story motion picture theaters shall not be limited when the building is provided with an automatic sprinkler system throughout in accordance with Section 903.3.1.1 and is surrounded and adjoined by public ways or yards not less than 60 feet (18 288 mm) in width.

507.10 Covered mall buildings and anchor stores. The area of covered mall buildings and anchor stores not exceeding three stories in height that comply with Section 402.6 shall not be limited.

508.2 Group S-2 enclosed or open parking garage with Group A, B, I, M ~~or~~ R, or S above. A basement and/or the first story above grade plane of a building shall be considered as a separate and distinct building for the purpose of determining area limitations, continuity of fire walls, limitation of number of stories and type of construction, when all of the following conditions are met:

1. The basement and/or the first story above grade plane is of Type IA construction and is separated from the building above with a horizontal assembly having a minimum 3-hour fire-resistance rating.

2. Shaft, stairway, ramp, elevator or escalator enclosures through the horizontal assembly shall have not less than a 2-hour fire-resistance rating with opening protectives in accordance with Table 715.3.

Exception: Where the enclosure walls below the horizontal assembly have not less than a 3-hour fire-resistance rating with opening protectives in accordance with Table 715.3, the enclosure walls extending above the horizontal assembly shall be permitted to have a 1-hour fire-resistance rating provided:

1. The building above the horizontal assembly is not required to be of Type I construction;

2. The enclosure connects less than four stories, and

3. The enclosure opening protectives above the horizontal assembly have a minimum 1-hour fire protection rating.

3. The building above the horizontal assembly contains only Group A having an assembly room with an occupant load of less than 300, or Group B, M, ~~or~~ R or S; and

4. The building below the horizontal assembly is a Group S-2 enclosed or open parking garage, used for the parking and storage of private motor vehicles.

Exceptions:

1. Entry lobbies, mechanical rooms and similar uses incidental to the operation of the building shall be permitted.

2. Group A having ~~an assembly room with an occupant load of less than 300,~~ assembly rooms having an aggregate occupant load of less than 300 or Group B or M shall be permitted in addition to those uses incidental to the operation of the building (including storage areas), provided that the entire structure below the horizontal assembly is protected throughout by an approved automatic sprinkler system.

3. The maximum building height in feet shall not exceed the limits set forth in ~~Table~~ Section 503 for the ~~least restrictive type of construction involved~~ building having the smaller allowable height as measured from the grade plane.

508.7.1 Fire separation. Fire ~~separation assemblies~~ barriers between the parking occupancy and the upper occupancy shall correspond to the required fire-resistance rating prescribed in Table ~~302.3.3~~ 302.3.2 for the uses involved. The type of construction shall apply to each occupancy individually, except that structural members, including main bracing within the open parking structure, which is necessary to support the upper occupancy, shall be protected with the more restrictive fire-resistance-rated assemblies of the groups involved as shown in Table 601. Means of egress for the upper occupancy shall conform to Chapter 10 and shall be separated from the parking occupancy by fire barriers having at least a 2-hour fire-resistance rating as required by Section 706, with self-closing doors complying with Section 715. Means of egress from the open parking garage shall comply with Section 406.3.

508.8 Basement and first story of open parking garages. Other provisions of this code notwithstanding, a basement or first story located below an open parking garage may be considered as a

separate and distinct building for the purpose of occupancy, area limitation and type of construction, when the basement or first story is separated from the open parking garage above with a three-hour occupancy separation and the basement and first floor are protected throughout by an automatic sprinkler system.

508.9 Transit sheds. The area of a Type IIB building meeting the definition of a "transit shed" may be increased to 250,000 square feet, provided there is no other building located closer than 200 feet to the building, and there is a paved access road at least 60 feet in width on all sides of the building.

SECTION 509
FOUNDATION ELEVATION

509.1 General. All new buildings constructed within this jurisdiction shall have the finished floor of the building not less than 12 inches above the nearest sanitary sewer manhole rim, or, where no sewer is available, the finished floor shall not be less than 4 inches above the crown of the street.

Exception: Buildings located in annexed subdivisions where the following conditions exist:

1. The subdivision was platted and recorded prior to annexation;

2. The sanitary sewer system for the subdivision was installed prior to annexation; and

3 The drainage piping from a building meets the requirements of Section 710 of the Plumbing Code.

NOTE: When a greater elevation is required by Chapter 19 of the City Code, then Chapter 19 shall govern.

509.2 Plans and applications. All construction plans and applications submitted for construction, sewer connections or septic systems shall reflect the elevations of the finished floor of the building and the elevation of the nearest manhole or crown of the street, whichever is applicable.

509.3 Damage risk. All permits for connection shall be issued on the condition that the owner take all the risk of damage that may result from water backing up into the premises from the sewer.

509.4 Existing structures. Existing structures required to be connected with a public or private sewer shall have the finished floor a minimum of 12 inches above the nearest manhole.

EXCEPTION: Where the public or private sewer is not of sufficient depth, or where structures required to be connected to the sewer cannot meet the minimum requirements of this section and other ordinances, the building official may authorize the issuance of a permit for an alternate method of construction or installation when this will not be detrimental to the health, welfare, and safety of the public.

CHAPTER 6
TYPES OF CONSTRUCTION

TABLE 601
FIRE-RESISTANCE RATING REQUIREMENTS FOR BUILDING ELEMENTS (hours)[g]

BUILDING ELEMENT	TYPE I		TYPE II		TYPE III		TYPE IV	TYPE V	
	A	B	A[d]	B	A[d]	B	HT	A[d]	B
Structural frame[a] ~~Including columns, girders, trusses~~	3[b]	2[b]	1	0	1	0	HT	1	0
Bearing walls									
Exterior[f]	3	2	1	0	2	2	2	1	0
Interior	3[b]	2[b]	1	0	1	0	1/HT	1	0
Nonbearing walls and partitions Exterior	See Table 602								
Nonbearing walls and partitions Interior[e]	0	0	0	0	0	0	See Section 602.4.6	0	0
Floor construction Including supporting beams and joists	2	2	1	0	1	0	HT	1	0
Roof construction Including supporting beams and joists	1½[c]	1[c]	1[c]	0[c]	1[c]	0	HT	1[c]	0

For SI: 1 foot = 304.8 mm.

a. The structural frame shall be considered to be the columns and the girders, beams, trusses and spandrels having direct connections to the columns and bracing members designed to carry gravity loads. The members of floor or roof panels which have no connection to the columns shall be considered secondary members and not a part of the structural frame.

b. Roof supports: Fire-resistance ratings of structural frame and bearing walls are permitted to be reduced by 1 hour where supporting a roof only.

c. 1. Except in Groups F-1, H, M, and S-1 ~~Factory Industrial (F-I), Hazardous (H), Mercantile (M) and Moderate Hazard Storage (S-1)~~ occupancies, fire protection of structural members shall not be required, including protection of roof framing and decking where every part of the roof construction is 20 feet or more above any floor immediately below. Fire-retardant-treated wood members shall be allowed to be used for such unprotected members.

2. In all occupancies, heavy timber shall be allowed where a 1-hour or less fire-resistance rating is required.

3. In Type I and Type II construction, fire-retardant-treated wood shall be allowed in buildings including girders and trusses as part of the roof construction when the building is:

i. Two stories or less in height;

ii. Type II construction over two stories; or

iii. Type I construction over two stories and the vertical distance from the upper floor to the roof is 20 feet or more.

d. An approved automatic sprinkler system in accordance with Section 903.3.1.1 shall be allowed to be substituted for 1-hour fire-resistance-rated construction, provided such system is not ~~otherwise required by other provisions of the code or~~ used for an allowable area increase in accordance with Section 506.3 or an allowable height increase in accordance with Section 504.2. The 1-hour substitution for the fire resistance of exterior walls shall not be permitted.

e. Not less than the fire-resistance rating required by other sections of this code.

f. Not less than the fire-resistance rating based on fire separation distance (see Table 602.).

g. When an automatic sprinkler system is provided throughout a building, the fire-resistive time periods may be reduced by one hour for permanent partitions, interior-bearing walls, floor construction, roof construction and beams supporting roofs.

TABLE 602

FIRE-RESISTANCE RATING REQUIREMENTS FOR EXTERIOR WALLS BASED ON FIRE SEPARATION DISTANCE [a]

FIRE SEPARATION DISTANCE (Feet)	TYPE OF CONSTRUCTION	GROUP H	GROUP F-1, M, S-1	GROUP A, B, E, F-2, I, R[b,e], S-2, U	GROUP S-2 OPEN PARKING GARAGES
< 5 c	IIB, VB	3	1	1	1
	~~All~~ Others	3	2	1	1
≥ 5	IA	3	2	1	1
<10	IIB, IIIB, VB	2	0	0[d]	1
	Others	2	1	1	1
≥10	IA, IB	2	1	1	0
< 30	IIB, IIIB,VB	1	0	0	0
	Others	1	1	1	0
≥30	All	0	0	0	0

For SI: 1 foot = 304.8 mm.

a. Load-bearing exterior walls shall also comply with the fire-resistance rating requirements of Table 601.
b. Group R-3 and Group U when used as accessory to Group R-3, as applicable in Section 101.2 shall not be required to have a fire-resistance rating where fire separation distance is 3 feet or more.
c. See Section 503.2 for party walls.
d. A, E, and I occupancies shall have a fire resistance rating of not less than 1 hour.
e. When Group R-3 single family homes are restricted by recorded plats and deed restrictions as to location on the property (i.e. patio homes), the structure may be constructed on the property line without a fire resistive wall provided the following conditions are met:
   i. The adjacent structures are a minimum of 6 feet apart and;
   ii. The adjacent roof projections are not less than 4 feet apart.

602.2 Types I and II. Type I and II construction are those types of construction in which the building elements listed in Table 601 are of noncombustible materials, except as permitted in Section 603 and elsewhere in this code.

602.4 Type IV. Type IV construction (Heavy Timber, HT) is that type of construction in which the exterior walls are of noncombustible materials and the interior building elements are of solid or laminated wood without concealed spaces. The details of Type IV construction shall comply with the provisions of this section. Fire-retardant-treated wood framing complying with Section 2303.2 shall be permitted within exterior wall assemblies with a 2-hour rating or less. Minimum solid sawn nominal dimensions are required for structures built using Type IV construction (Heavy Timber). For Glued Laminated members the equivalent net finished width and depths corresponding to the minimum nominal width and depths of solid sawn lumber are required as specified in Table 602.4.

TABLE 602.4
WOOD MEMBER SIZE

Minimum Nominal Solid Sawn Size		Minimum Glued Laminated Net Size	
Width, in.	Depth, in.	Width, in.	Depth, in.
8	8	6-3/4	8-1/4
6	10	5	10-1/2
6	8	5	8-1/4
6	6	5	6
4	6	3	6-7/8

For SI: 1 inch = 25.4 mm

603.1 Allowable materials. Combustible materials shall be permitted in buildings of Type I or II construction in the following applications and in accordance with Sections 603.1.1 through 603.1.3:

1. Fire-retardant-treated wood shall be permitted in:

   1.1. Nonbearing partitions where the required fire-resistance rating is 2 hours or less.

   1.2. Nonbearing exterior walls where no fire rating is required.

   1.3. Roof construction as permitted in Table 601, Note c, Item 3.

   1.4 Roof decking.

   1.5 Roof structures such as walkways, decks, fences, flower boxes or similar appendages.

2. Thermal and acoustical insulation, other than foam plastics, having a flame spread index of not more than 25.

   Exceptions:

   1. Insulation placed between two layers of noncombustible materials without an intervening airspace shall ~~be allowed to~~ have a flame spread index of not more than 100.

   2. Insulation installed between a finished floor and solid decking without intervening airspace shall ~~be allowed to~~ have a flame spread index of not more than 200.

3. Foam plastics in accordance with Chapter 26.

4. Roof coverings that have an A, B or C classification.

5. Interior floor finish and floor covering materials installed in accordance with Section 804; ~~and~~ interior finish, trim and millwork such as doors, door frames, window sashes and frames.

6. Where not installed over 15 feet (4572 mm) above grade, show windows, nailing or furring strips, wooden bulkheads below show windows, their frames, aprons and show cases.

7. Finish~~ed~~ flooring ~~applied directly to the floor slab or to wood sleepers that are~~ ~~firestopped in accordance with Section 717.2.7~~ installed in accordance with Section 804.

8. Partitions dividing portions of stores, offices or similar places occupied by one tenant only and which do not establish a corridor serving an occupant load of 30 or more shall be permitted to be constructed of fire-retardant- treated wood, 1-hour fire-resistance-rated construction or of wood panels or similar light construction up to 6 feet (1829 mm) in height.

9. Platforms as permitted in Section 410.

10. Combustible exterior wall coverings, balconies, or similar projections, and bay or oriel windows, or similar appendages in accordance with Chapter 14.

11. Blocking such as for handrails, millwork, cabinets, and window and door frames.

12. Light-transmitting plastics as permitted by Chapter 26.

13. Mastics and caulking materials applied to provide flexible seals between components of exterior wall construction.

14. Exterior plastic veneer installed in accordance with Section 2605.2.

15. Nailing or furring strips as permitted by Section 803.4.

16. Heavy timber as permitted by Note c, Item 2, to Table 601 and Sections 602.4.7 and 1406.3.

17. Aggregates, component materials and admixtures as permitted by Section 703.2.2.

18. Sprayed ~~cementitious and mineral fiber fire-resistance- rated~~ fire-resistant materials, and intumescent and mastic fire resistant coatings, determined on the basis of fire-resistance tests in accordance with Section 703.2 and installed to comply with Sections 1704.11 and 1704.12, respectively.

19. Materials used to protect penetrations in fire-resistance-rated assemblies in accordance with Section 712.

20. Materials used to protect joints in fire-resistance-rated assemblies in accordance with Section 713.

21. Materials allowed in the concealed spaces of buildings of Type I and II construction in accordance with Section 717.5.

22. Materials exposed within plenums complying with Section 602 of the ~~*International*~~ *Mechanical Code*.

23. Concrete treads, risers and landings may be painted or finished with vinyl, rubber or asbestos tile.

24. Stairways not required to be enclosed may have treads, risers and landings finished as required for floor coverings.

25. An enclosed corridor on the ground floor leading from the stairway to the exterior of the building may be finished as required for corridors provided an approved fire rated door separates the stairway enclosure from the corridor.

CHAPTER 7
FIRE-RESISTANCE-RATED CONSTRUCTION

SECTION 702
DEFINITIONS

702.1 Definitions. The following words and terms shall, for the purposes of this chapter, and as used elsewhere in this code, have the meanings shown herein.

COMBINATION FIRE/SMOKE DAMPER. A listed device installed in ducts and air transfer openings designed to close automatically upon the detection of heat and ~~to also~~ resist the passage of flame ~~air~~ and smoke. The device is installed to operate automatically, controlled by a smoke detection system, and where required, is capable of being positioned from a ~~remote~~ fire command ~~station~~ center.

FIRE DAMPER. A listed device~~,~~ installed in ducts and air transfer openings ~~of an air distribution system or smoke control system,~~ designed to close automatically upon detection of heat~~, to interrupt migratory airflow~~, and to ~~restrict~~ resist the passage of flame. Fire dampers are classified for use in either static systems that will automatically shut down in the event of a fire, or in dynamic systems that continue to operate during a fire. A dynamic fire damper is tested and rated for closure under elevated temperature with airflow.

FLOOR FIRE DOOR ASSEMBLY. A combination of a fire door, a frame, hardware and other accessories installed in a horizontal plane, which together provide a specific degree of fire protection to a through opening in a fire-resistance-rated floor (see Section ~~712.4.6~~ 711.8).

MINERAL FIBER. Insulation composed principally of fibers manufactured from rock, slag or glass, with or without binders.

MINERAL WOOL. Synthetic vitreous fiber insulation made by melting predominately igneous rock or furnace slag, and other inorganic materials, and then physically forming the melt into fibers.

SMOKE DAMPER. A listed device installed in ducts and air transfer openings ~~that is~~ designed to resist the passage of ~~air and~~ smoke. The device is installed to operate automatically, controlled by a smoke detection system, and where required, is capable of being positioned from a ~~remote~~ fire command ~~station~~ center.

***NOTE: ALL OTHER PORTIONS OF SECTION 702 REMAIN AS SET FORTH IN THE INTERNATIONAL BUILDING CODE.**

703.2.1 Nonsymmetrical wall construction. Interior walls and partitions of nonsymmetrical construction shall be tested with both faces exposed to the furnace, and the assigned fire-resistance rating shall be the shortest duration obtained from the two tests conducted in compliance with ASTM E 119. When evidence is furnished to show that the wall was tested with the least fire-resistant side exposed to the furnace, subject to acceptance of the building official, the wall need not be subjected to tests from the opposite side (see Section 704.5 for exterior walls).

Exception: A one-hour rated wall obtained by cementitious material sprayed on steel siding and complying with a listed design shall be rated for exposure to fire from the cementitious side only.

704.1 General. Exterior walls shall ~~be fire-resistance rated and have opening protection as required by~~ comply with this section.

704.2.3 Combustible projections. Combustible projections located where openings are not permitted or where protection of openings is required shall be of at least 1-hour fire-resistance-rated construction, Type IV construction, fire retardant treated wood or as required by Section 1406.3.

Exception: Type V construction shall be allowed for R-3 occupancies, as applicable in Section 101.2.

TABLE 704.8
MAXIMUM AREA OF EXTERIOR WALL OPENINGS[a]

CLASSIFICATION OF OPENING	FIRE SEPARATION DISTANCE (feet)							
	Less than ~~0 to 3~~[e,h]	~~Greater than 3~~ but less than ~~to 5~~[b,f]	~~Greater than 5~~ but less than ~~to 10~~[b,d,f]	~~Greater than 10~~ but less than ~~to 15~~ [c,d,f]	~~Greater than 15~~ but less than ~~to 20~~[c,f]	~~Greater than 20~~ but less than ~~to 25~~ [c,f]	~~Greater than 25~~ but less than ~~to 30~~[c,f]	~~Greater than 30~~ or More
~~Unprotected~~	~~Not Permitted~~ [g]	Not Permitted [b,~~f~~g]	10%[g]	15%[g]	25%[g]	45%[g]	70% [g]	No Limit
Protected	Not Permitted	15 %	25 %	45%	75%	No Limit	No Limit	No Limit

For SI: 1 foot = 304.8 mm.

a. Values given are percentage of the area of the exterior wall in any story.
b. For occupancies in Group R-3, as applicable in Section 101.2, the maximum percentage of unprotected and protected exterior wall openings shall be 25 percent.
c. The area of openings in an open parking structure with a fire separation distance of ~~greater than~~ 10 feet or greater shall not be limited.
d. For occupancies in Group H-2 or H-3, unprotected openings shall not be permitted for openings with fire separation distance of ~~15 feet or~~ less than 15 feet.
e. For requirements for fire walls for buildings with differing roof heights, see Section 705.6.1.
f. The area of unprotected and protected openings is not limited for occupancies in Group R-3, as applicable in Section 101.2, with a fire separation distance ~~greater than~~ 5 feet or greater.
g. Buildings whose exterior bearing wall, exterior nonbearing wall and exterior structural frame are not required to be fire-resistance rated by Table 601 or Table 602 shall be permitted to have unlimited unprotected openings.
h. Includes accessory buildings to Group R-3 as applicable in Section 101.2.

704.5 Fire-resistance ratings. Exterior walls shall be fire-resistance rated in accordance with Tables 601 and 602. The fire-resistance rating of exterior walls with a fire separation distance of greater than 5 feet (1524 mm) shall be rated for exposure to fire from the inside. The fire-resistance rating of exterior walls with a fire separation distance of 5 feet (1524 mm) or less shall be rated for exposure to fire from both sides.

Exception: A one-hour rated wall obtained by cementitious material sprayed on steel siding and complying with a listed design shall be rated for exposure to fire from the cementitious side only.

704.8.1 Automatic sprinkler system. In buildings equipped throughout with an automatic sprinkler system in accordance with Section 903.3.1.1 and 903.3.1.2, the maximum allowable area of unprotected openings in occupancies other than Groups H-1, H-2, and H-3 shall be the same as the tabulated limitations for protected openings.

704.8.2 First story. In occupancies other than Group H, unlimited unprotected openings are permitted in the ~~first story of~~ exterior walls of the first story above grade facing a street that have a fire separation distance of greater than 15 feet (4572 mm), or facing an unoccupied space. The unoccupied space shall be on the same lot or dedicated for public use, shall not be less than 30 feet (9144 mm) in width, and shall have access from a street by a posted fire lane in accordance with the ~~*International*~~ *Fire Code*.

704.9 Vertical separation of openings. Openings in exterior walls in adjacent stories shall be separated vertically to protect against fire spread on the exterior of the buildings where the openings are within 5 feet (1524 mm) of each other horizontally and the opening in the lower story is not ~~a~~ protected opening ~~in accordance with Section 715.4.8~~ with a fire protection rating of not less than 3/4 hour. Such openings shall be separated vertically at least 3 feet (914 mm) by spandrel girders, exterior walls or other similar assemblies that have a fire-resistance rating of at least 1 hour or by flame barriers that extend horizontally at least 30 inches (762 mm) beyond the exterior wall. Flame barriers shall also have a fire-resistance rating of at least 1 hour. The unexposed surface temperature limitations specified in ASTM E 119 shall not apply to the flame barriers or vertical separation unless otherwise required by the provisions of this code.

Exceptions:

1. This section shall not apply to buildings that are three stories or less in height.
2. This section shall not apply to buildings equipped throughout with an automatic sprinkler system in accordance with Section 903.3.1.1 or 903.3.1.2.
3. Open parking garages.

704.10 Vertical exposure. For buildings on the same lot, ~~approved~~ opening protectives having a fire protection rating of not less than 3/4 hour shall be provided in every opening that is less than 15 feet (4572 mm) vertically above the roof of an adjoining building or adjacent structure that is within a horizontal fire separation distance of 15 feet (4572 mm) of the wall in which the opening is located.

Exception: Opening protectives are not required where the roof construction has a fire-resistance rating of not less than 1 hour for a minimum distance of 10 feet (3048 mm) from the adjoining building and the entire length and span of the supporting elements for the fire-resistance-rated roof assembly has a fire-resistance rating of not less than 1 hour.

704.11 Parapets. Parapets shall be provided on exterior walls of buildings.

Exceptions: A parapet need not be provided on an exterior wall where any of the following conditions exist:

1. The wall is not required to be fire-resistance rated in accordance with Table 602 because of fire separation distance.
2. The building has an area of not more than ~~1,000~~ 2,000 square feet (~~93~~ 185.81 m^2) on any floor.

3. Walls that terminate at roofs of not less than 2-hour fire-resistance-rated construction or where the roof, including the deck or slab and supporting construction, is constructed entirely of noncombustible materials.

4. One-hour fire-resistance-rated exterior walls that terminate at the underside of the roof sheathing, deck or slab, provided:

   4.1. Where the roof/ceiling framing elements are parallel to the walls, such framing and elements supporting such framing shall not be of less than 1-hour fire-resistance-rated construction for a width of 4 feet (1220 mm) ~~measured from the interior side of the wall~~ for Groups R and U and 10 feet (3048 mm) for other occupancies, measured from the interior side of the wall.

   4.2. Where roof/ceiling framing elements are not parallel to the wall, the entire span of such framing and elements supporting such framing shall not be of less than 1-hour fire-resistance-rated construction.

   4.3. Openings in the roof shall not be located within 5 feet (1524 mm) of the 1-hour fire-resistance-rated exterior wall for Groups R and U and 10 feet (3048 mm) for other occupancies, measured from the interior side of wall. In townhomes a chimney shall be permitted within 5 feet of the party wall, when the chimney extends at least 5 feet above the roof deck and is built of one-hour construction.

   4.4. The entire building shall be provided with not less than a Class B roof covering.

5. In ~~occupancies of~~ Groups R-2 and R-3 as applicable in Section 101.2, ~~both~~ where the entire building is provided with a Class C roof covering, the exterior wall shall be permitted to terminate at the roof sheathing or deck in Types III, IV and V construction provided:

   5.1. The roof sheathing or deck is constructed of approved noncombustible materials or of fire-retardant-treated wood, for a distance of 4 feet (1220 mm); or

   5.2. The roof is protected with 0.625-inch (15.88 mm) Type X gypsum board directly beneath the underside of the roof sheathing or deck, supported by a minimum of nominal 2-inch (51 mm) ledgers attached to the sides of the roof framing members, for a minimum distance of 4 feet (1220 mm).

6. Where the wall is permitted to have at least 25 percent of the exterior wall areas containing unprotected openings based on fire separation distance as determined in accordance with Section 704.8.

704.12 Opening protection. Windows in exterior walls required to ~~be~~ have protected openings in accordance with other sections of this code or determined to be protected in accordance with Section 704.3 or 704.8 ~~Section 704.8, 704.9, or 704.10~~ shall comply with Section 715.4. Other openings required to be protected with fire door~~s~~ or shutter~~s~~ assemblies in accordance with other sections of this code or determined to be protected in accordance with Section 704.3 or 704.8 ~~Sections 704.8, 704.9 and 704.10~~ shall comply with Section 715.3.

> **Exception:** ~~Fire protective assemblies~~ Opening protectives are not required where the building is protected throughout by an automatic sprinkler system and the exterior openings are protected by an approved water curtain using automatic sprinklers approved for that use. The sprinklers and the water curtain shall be installed in accordance with NFPA 13 and shall have an automatic water supply and fire department connection.

705.1 General. Each portion of a building separated by one or more fire walls that comply with the provisions of this section shall be considered a separate building. The extent and location of such fire walls shall provide a complete separation. Where a fire wall also separates ~~groups~~ occupancies that are required to be separated by a fire barrier wall, the most restrictive requirements of each separation shall apply. ~~Fire walls located on lot lines shall also comply with Section 503.2. Such fire walls (party walls) shall be constructed without openings.~~

> **705.1.1 Party walls.** Any wall located on a lot line between adjacent buildings, which is used or adapted for joint service between the two buildings, shall be constructed as a fire wall in accordance with Section 705. Party walls shall be constructed without openings and shall create separate buildings.

> **705.6.1 Stepped buildings.** Where a fire wall serves as an exterior wall for a building and separates buildings having different roof levels, such wall shall terminate at a point not less than 30 inches (762 mm) above the lower roof level, provided the exterior wall for a height of 15 feet (4572 mm) above the lower roof is not less than 1-hour fire-resistance-rated construction from both sides with openings protected by fire assemblies having a ~~3/4-hour~~ fire protection rating of not less than 3/4 hour.

> > **Exception:** Where the fire wall terminates at the underside of the roof sheathing, deck or slab of the lower roof, provided:
>
> 1. The lower roof assembly within 10 feet (3048 mm) of the wall has not less than a 1-hour fire-resistance rating and the entire length and span of supporting elements for the rated roof assembly has a fire-resistance rating of not less than 1 hour.
> 2. Openings in the lower roof shall not be located within 10 feet (3048 mm) of the fire wall.

706.1 General. Fire barriers used for separation of shafts, exit~~s~~ enclosures, exit passageways, horizontal exits, ~~or~~ incidental use areas, control areas, to separate different occupancies, to separate a single occupancy into different fire areas, or to separate other areas where a fire barrier is required elsewhere in this code or the ✎ ~~*International*~~ *Fire Code*, shall comply with this section.

706.2.1 Fire-resistance-rated glazing. Fire-resistance-rated glazing when tested in accordance with ASTM E119 and complying with the requirements of Section 706 shall be permitted. Fire-resistance-rated glazing shall bear a label or other identification showing the name of the manufacturer, the test standard and the identifier "W-XXX" where the "XXX" is the fire-resistance rating in minutes. Such label or identification shall be issued by an approved agency and shall be permanently affixed.

706.3.6 Control areas. Fire barriers separating control areas shall have a fire-resistance rating of not less than that required in Section 414.2.3.

~~**706.3.6**~~ **706.3.7 Separation of mixed occupancies.** Where the provisions of Section 302.3.2 are applicable, the fire barrier separating mixed occupancies shall have a fire-resistance rating of not less than that indicated in Section 302.3.2 based on the occupancies being separated.

~~**706.3.7**~~ **706.3.8 Single-occupancy fire areas.** The fire barrier separating a single occupancy into different fire areas shall have a fire-resistance rating of not less than that indicated in Table 706.3.~~7~~8.

TABLE ~~706.3.7~~ 706.3.8
FIRE-RESISTANCE RATING REQUIREMENTS FOR FIRE BARRIER ASSEMBLIES BETWEEN FIRE AREAS

NOTE: PORTIONS OF THE TABLE NOT SHOWN REMAIN UNCHANGED.

706.4 Continuity of fire barrier walls. Fire barrier walls shall extend from the top of the foundation or floor/ceiling assembly below to the underside of the floor or roof sheathing, slab or deck above and shall be securely attached thereto. These walls shall be continuous through concealed spaces such as the space above a suspended ceiling. The supporting construction for fire barrier walls shall be protected to afford the required fire-resistance rating of the fire barrier supported except for 1-hour fire-resistance-rated incidental use area separations as required by Table 302.1.1 in buildings of Type IIB, IIIB and VB construction. Hollow vertical spaces within the fire barrier wall shall be ~~firestopped~~ fireblocked in accordance with Section 717.2 at every floor level.

Exceptions:

1. The maximum required fire-resistance rating for assemblies supporting fire barriers separating tank storage as provided for in Section 415.7.2.1 shall be 2 hours, but not less than required by Table 601 for the building construction type.

2. Shaft enclosure shall be permitted to terminate at a top enclosure complying with Section 707.12.

706.6 Exterior walls. Where exterior walls serve as a part of a required fire-resistance-rated enclosure or separation, such walls shall comply with the requirements of Section 704 for exterior walls and the fire-resistance-rated enclosure or separation requirements shall not apply.

Exception: Exterior walls required to be fire-resistance rated in accordance with Section 1013.5.1 for exterior egress balconies, Section 1019.1.4 for exit enclosures and Section1022.6 for exterior exit ramps and stairways.

706.7 Openings. Openings in a fire barrier wall shall be protected in accordance with Section 715. Openings shall be limited to a maximum aggregate width of 25 percent of the length of the wall, and the maximum area of any single opening shall not exceed ~~120~~ 156 square feet (~~11~~ 14.5 m^2). Openings in exit enclosures and exit passageways shall also comply with Section 1019.1.1 and 1020.4, respectively.

Exceptions:

1. Openings shall not be limited to ~~120~~ 156 square feet (~~11~~ 14.5 m^2) where adjoining fire areas are equipped throughout with an automatic sprinkler system in accordance with Section 903.3.1.1.

2. Fire doors serving an exit enclosure.

3. Openings shall not be limited to ~~120~~ 156 square feet (~~11~~ 14.5 m^2) or an aggregate width of 25 percent of the length of the wall where the opening protective assembly has been tested in accordance with ASTM E 119 and has a minimum fire-resistance rating not less than the fire-resistance rating of the wall.

4. Fire windows permitted in atrium separation walls shall not be limited to a maximum aggregate width of 25 percent of length of the wall.

706.8.1 Prohibited penetrations. Penetrations into an exit enclosure or an exit passageway shall ~~only~~ be allowed only when permitted by Section 1019.1.2 or 1020.5, respectively.

706.10 Ducts and air transfer openings. Penetrations in a fire barrier by ducts and air transfer openings shall comply with Sections 712 and 716.

707.1 General. The provisions of this section shall apply to vertical shafts where such shafts are required to protect openings and penetrations through floor/ceiling and roof/ceiling assemblies. Shaft enclosures shall be constructed as fire barriers in accordance with Section 706.

707.2 Shaft enclosure required. Openings through a floor/ceiling assembly shall be protected by a shaft enclosure complying with this section.

Exceptions:

1. A shaft enclosure is not required for openings totally within an individual residential dwelling unit and connecting four stories or less.

2. A shaft enclosure is not required in a building equipped throughout with an automatic sprinkler system in accordance with Section 903.3.1.1 for an escalator opening or stairway ~~which~~ that is not a portion of the means of egress protected according to Item 2.1 or 2.2:

2.1. Where the area of the floor opening between stories does not exceed twice the horizontal projected area of the escalator or stairway and the opening is protected by a draft curtain and closely spaced sprinklers in accordance with NFPA 13. In other than Groups B and M, this application is limited to openings that do not connect more than four stories.

2.2. Where the opening is protected by approved power-operated automatic shutters at every floor penetrated. The shutters shall be of noncombustible construction and have a fire-resistance rating of not less than 1.5 hours. The shutter shall be so constructed as to close immediately upon the actuation of a smoke detector installed in accordance with Section ~~907.10~~ 907.11 and shall completely shut off the well opening. Escalators shall cease operation when the shutter begins to close. The shutter shall operate at a speed of not more than 30 feet per minute (152.4 mm/s) and shall be equipped with a sensitive leading edge to arrest its progress where in contact with any obstacle, and to continue its progress on release therefrom.

3. A shaft enclosure is not required for penetrations by pipe, tube, conduit, wire, cable, and vents protected in accordance with Section 712.4.

4. A shaft enclosure is not required for penetrations by ducts protected in accordance with Section 712.4. Grease ducts shall be protected in accordance with the ~~*International*~~ *Mechanical Code*.

5. In other than Group H occupancies, a ~~A~~ shaft enclosure is not required for floor openings complying with the provisions for ~~covered~~ malls or atriums in Sections 402 and 404, respectively.

6. A shaft enclosure is not required for approved masonry chimneys, where annular space protection is provided at each floor level in accordance with Section 717.2.5.

7. In other than Group~~s I-2 and~~ I-3, a shaft enclosure is not required for a floor opening or an air transfer opening that complies with the following:

7.1. Does not connect more than two stories.

7.2. Is not part of the required means of egress system except as permitted in Section 1019.1.

7.3. Is not concealed within the building construction.

7.4. Is not open to a corridor in Group I and R occupancies.

7.5. Is not open to a corridor on nonsprinklered floors in any occupancy.

7.6. Is separated from floor openings and air transfer openings serving other floors by construction conforming to required shaft enclosures.

7.7 Is limited to the same smoke compartment.

8. A shaft enclosure is not required for automobile ramps in open parking garages and enclosed parking garages constructed in accordance with Sections 406.3 and 406.4, respectively.

9. A shaft enclosure is not required for floor openings between a mezzanine and the floor below.

10. A shaft enclosure is not required for joints protected by a fire-resistant joint system in accordance with Section 713.

11. Where permitted by other sections of this code.

12. A shaft enclosure shall not be required for floor openings created by unenclosed stairs or ramps in accordance with exception 8 or 9 in Section 1019.1.

13. Floor openings protected by floor fire door assemblies in accordance with Section 711.8.

707.4 Fire-resistance rating. Shaft enclosures shall have a fire-resistance rating of not less than 2 hours where connecting four stories or more and not less than1 hour where connecting less than four stories. The number of stories connected by the shaft enclosure shall include any basements but not any mezzanines. ~~Shaft enclosures shall be constructed as fire barriers in accordance with Section 706~~. Shaft enclosures shall have a fire-resistance rating not less than the floor assembly penetrated, but need not exceed 2 hours.

Exception: In buildings not greater than 420 feet in height, the fire resistive time period for shafts other than the stairway enclosures and elevator shafts may be reduced to one hour when sprinklers are installed within the shafts at alternate floors.

707.5 Continuity. Shaft enclosures shall be constructed as fire barriers in accordance with Section 706 and shall have continuity in accordance with Section 706.4. ~~Shaft enclosure walls shall extend from the top of the floor/ceiling assembly below to the underside of the floor or roof slab or deck above and shall be securely attached thereto. These walls shall be continuous through concealed spaces such as the space above a suspended ceiling. The supporting construction shall be protected to afford the required fire-resistance rating of the element supported. Hollow vertical spaces within the shaft enclosure construction wall shall be fire-stopped at every floor level.~~

707.6 Exterior walls. Where exterior walls serve as a part of a required shaft enclosure, such walls shall comply with the requirements of Section 704 for exterior walls and the fire-resistance-rated enclosure requirements shall not apply.

Exception: Exterior walls required to be fire-resistance rated in accordance with Section 1013.5.1 for exterior egress balconies, Section 1019.1.4 for exit enclosures, and Section 1022.6 for exterior exit ramps and stairways.

707.8.1 Prohibited penetrations. Penetrations other than those necessary for the purpose of the shaft shall not be permitted in shaft enclosures. ~~Ducts shall not penetrate exit shaft enclosures.~~

~~**Exception:** Duct penetrations as permitted in Section 1019.1.2.~~

707.10 Ducts and air transfer openings. Penetrations of a shaft enclosure by ducts and air transfer openings shall comply with Section~~s 712 and~~ 716.

707.11 Enclosure at the bottom. Shafts that do not extend to the bottom of the building or structure shall:

1. Be enclosed at the lowest level with construction of the same fire-resistance rating as the lowest floor through which the shaft passes, but not less than the rating required for the shaft enclosure;

2. Terminate in a room having a use related to the purpose of the shaft. The room shall be separated from the remainder of the building by ~~construction~~ a fire barrier having a fire-resistance rating and opening protectives at least equal to the protection required for the shaft enclosure; or

3. Be protected by approved fire dampers installed in accordance with their listing at the lowest floor level within the shaft enclosure.

   Exceptions:

   1. The fire-resistance-rated room separation is not required provided there are no openings in or penetrations of the shaft enclosure to the interior of the building except at the bottom. The bottom of the shaft shall be closed off around the penetrating items with materials permitted by Section 717.3.1 for draftstopping, or the room shall be provided with an approved automatic fire suppression system.

   2. A shaft enclosure containing a refuse chute or laundry chute shall not be used for any other purpose and shall terminate in a room protected in accordance with Section 707.13.4.

   3. The fire-resistance-rated room separation and the protection at the bottom of the shaft are not required provided there are no combustibles in the shaft and there are no openings or other penetrations through the shaft enclosure to the interior of the building.

707.12 Enclosure at the top. A shaft enclosure that does not extend to the underside of the roof sheathing, deck or slab of the building shall be enclosed at the top with construction of the same fire-resistance rating as the topmost floor penetrated by the shaft, but not less than the fire-resistance rating required for the shaft enclosure.

707.13.1 Refuse and laundry chute enclosures. A shaft enclosure containing a refuse or laundry chute shall not be used for any other purpose and shall be enclosed in accordance with Section 707.4. Openings into the shaft, including those from access rooms and termination rooms, shall be protected in accordance with this section and Section 715. Openings into chutes shall not be located in ~~exit access~~ corridors. ~~Opening protectives~~ Doors shall be self-closing or automatic-

closing upon the actuation of a smoke detector ~~installed~~ in accordance with Section ~~907.10~~ 715.3.7.3, except that heat-activated closing devices shall be permitted between the shaft and the termination room.

707.13.3 Refuse and laundry chute access rooms. Access openings for refuse and laundry chutes shall be located in rooms or compartments completely enclosed by ~~construction~~ a fire barrier that has a fire-resistance rating of not less than 1 hour. Openings into the access rooms shall be protected by opening protectives having a fire protection rating of not less than 3/4 hour. ~~and~~ Doors shall be self-closing or automatic-closing upon the detection of smoke in accordance with Section 715.3.7.3.

707.13.4 Termination room. Refuse and laundry chutes shall discharge into an enclosed room ~~completely~~ separated from the remainder of the building by a fire barrier ~~construction~~ that has a fire-resistance rating of not less than 1 hour. ~~and o~~ Openings into the termination room shall be protected by opening protectives having a fire protection rating of not less than 3/4 hour. ~~and~~ Doors shall be self-closing or automatic-closing upon the detection of smoke in accordance with Section 715.3.7.3. Refuse chutes shall not terminate in an incinerator room. Refuse and laundry rooms that are not provided with chutes need only comply with Table 302.1.1.

707.14.1 Elevator lobby. An enclosed elevator lobby shall be provided at each floor where an elevator shaft enclosure connects more than three stories. ~~Elevators opening into a fire-resistance- rated corridor as required by Section 1016.1 shall be provided with an elevator lobby at each floor containing such a corridor.~~ The lobby shall separate the elevator~~s~~ shaft enclosure doors from each floor ~~the corridor~~ by fire partitions and the required opening protection. Elevator lobbies shall have at least one means of egress complying with Chapter 10 ~~and other provisions within this code~~.

Exceptions:

1. ~~In office buildings,~~ Separations are not required from a street-floor elevator lobby. ~~provided the entire street floor is equipped with an automatic sprinkler system in accordance with Section 903.3.1.1.~~

2. Elevators not required to be located in a shaft in accordance with Section 707.2.

3. Where additional doors are provided at the hoistway opening in accordance with Section 3002.6. Such doors shall be tested in accordance with UL 1784 without an artificial bottom seal.

4. In other than Group I-3, and buildings having occupied floors located more than ~~four stories~~ 75 feet above ~~the lowest level of fire department vehicle access~~ grade plane, lobby separation is not required where the building~~, including the lobby and corridors leading to the lobby,~~ is protected by an automatic sprinkler system installed throughout in accordance with Section 903.3.1.1 or 903.3.1.2.

5. In all occupancies, separation need not be provided when the building is protected with an automatic sprinkler system.

6. Existing buildings that were permitted before January 25, 1997.

7. Elevator lobbies are not required provided that the elevator shaft enclosure is pressurized in accordance with Section 909.20.5.

708.1 General. The following wall assemblies shall comply with this section.

1. Walls separating dwelling units in the same building.

2. Walls separating sleeping units in occupancies in Group R-1, hotel ~~occupancies~~, R-2 and I-1 occupancies.

3. Walls separating tenant spaces in covered mall buildings as required by Section 402.7.2.

4. Corridor walls as required by Section 1016.1.

5. Elevator lobbies as required by Section 707.14.1.

6. Residential aircraft hangers.

708.3 Fire-resistance rating. ~~The~~ Fire partitions shall have a fire-resistance rating of ~~the walls shall be~~ not less than 1 hour.

Exceptions:

1. Corridor walls as permitted by Table 1016.1.

2. Dwelling unit and sleeping unit separations in buildings of Type IIB, IIIB and VB construction shall have fire-resistance ratings of not less than ½ hour in buildings equipped throughout with an automatic sprinkler system in accordance with Section 903.3.1.1.

708.4 Continuity. Fire partitions shall extend from the top of the foundation or floor/ceiling assembly below to the underside of the floor or roof sheathing, slab or deck above or to the fire-resistance-rated floor/ceiling or roof/ceiling assembly above, and shall be securely attached thereto. If the partitions are not continuous to the sheathing, deck or slab, and where constructed of combustible construction, the space between the ceiling and the sheathing, deck or slab above shall be fireblocked or draftstopped in accordance with Sections 717.2~~.1~~ and 717.3~~.1~~ at the partition line. The supporting construction shall be protected to afford the required fire-resistance rating of the wall supported, except for tenant and sleeping unit separation walls and ~~exit access~~ corridor walls in buildings of Types IIB, IIIB, and VB construction.

Exceptions:

1. The wall need not be extended into the crawl space below where the floor above the crawl space has a minimum 1-hour fire-resistance rating.

2. Where the room-side fire-resistance-rated membrane of the corridor is carried through to the underside of the ~~a fire-resistance-rated~~ floor or roof sheathing, deck or slab of a fire-resistance-rated floor or roof above, the ceiling of the corridor shall be permitted to be protected by the use of ceiling materials as required for a 1-hour fire-resistance-rated floor or roof system.

3. Where the corridor ceiling is constructed as required for the corridor walls, the walls shall be permitted to terminate at the upper membrane of such ceiling assembly.

4. The fire partition separating tenant spaces in a mall, complying with Section 402.7.2, is not required to extend beyond the underside of a ceiling that is not part of a fire-resistance-rated assembly. A wall is not required in attic or ceiling spaces above tenant separation walls.

5. Fireblocking or draftstopping is not required at the partition line in Group R-2 buildings that do not exceed four stories in height provided the attic space is subdivided by draftstopping into areas not exceeding 3,000 square feet (279 m^2) or above every two dwelling units, whichever is smaller.

6. Fireblocking or draftstopping is not required at the partition line in buildings equipped with an automatic sprinkler system installed throughout in accordance with Section 903.3.1.1 or 903.3.1.2 provided that automatic sprinklers are installed in combustible floor/ceiling and roof/ceiling spaces.

708.5 Exterior walls. Where exterior walls serve as a part of a required fire-resistance-rated ~~enclosure~~ separation, such walls shall comply with the requirements of Section 704 for exterior walls and the fire-resistance-rated ~~enclosure~~ separation requirements shall not apply.

Exception: Exterior walls required to be fire-resistance rated in accordance with Section 1013.5.1 for exterior egress balconies, Section 1019.1.4 for exit enclosures, and Section 1022.6 for exterior exit ramps and stairways.

708.9 Ducts and air transfer openings. Penetrations in a fire partition by ducts and air transfer openings shall comply with Sections 712 and 716.

709.4 Continuity. Smoke barriers shall form an effective membrane continuous from outside wall to outside wall and from ~~floor slab~~ the top of the foundation or floor/ceiling assembly below to the underside of the floor or roof sheathing, deck, or slab above, including continuity through concealed spaces, such as those found above suspended ceilings, and interstitial structural and mechanical spaces. The supporting construction shall be protected to afford the required fire-resistance rating of the wall or floor supported in buildings of other than Type IIB, IIIB or VB construction.

Exception: Smoke barrier walls are not required in interstitial spaces where such spaces are designed and constructed with ceilings that provide resistance to the passage of fire and smoke equivalent to that provided by the smoke barrier walls.

709.5 Openings. Openings in a smoke barrier shall be protected in accordance with Section 715.

Exception: In Group I-2, where such doors are installed across corridors, a pair of opposite-swinging doors without a center mullion shall be installed having vision panels with ~~approved~~ fire-~~resistance~~ protection-rated glazing materials in ~~approved~~ fire-~~resistance~~ protection-rated frames, the area of which shall not exceed that tested. The doors shall be close fitting within operational tolerances, and shall not have undercuts, louvers or grilles. The doors shall have head and jamb

stops, astragals or rabbets at meeting edges and shall be automatic-closing ~~devices~~ by smoke detection in accordance with Section 715.3.7.3. Positive-latching devices are not required.

709.8 Duct and air transfer openings. Penetrations in a smoke barrier by ducts and air transfer openings shall comply with Section~~s 712 and~~ 716.

710.4 Continuity. Smoke partitions shall extend from the top of the foundation or floor below to the underside of the floor or roof sheathing, deck or slab above or to the underside of the ceiling above where the ceiling membrane is constructed to limit the transfer of smoke.

~~**710.5.2 Smoke and draft-control doors.** Where required elsewhere in the code, doors in smoke partitions shall be tested in accordance with UL 1784 with an artificial bottom seal installed across the full width of the bottom of the door assembly. The air leakage rate of the door assembly shall not exceed 3.0 cubic feet per minute per square foot [$ft^3/(min\ ft^2)$] ($0.015424\ m^3/sm^2$) of door opening at 0.10 inch (24.9Pa) of water for both the ambient temperature test and the elevated temperature exposure test.~~

~~**710.5.3** **Self-closing or automatic-closing doors.** Where required elsewhere in the code, doors in smoke partitions shall be self-closing or automatic-closing in accordance with Section 715.3.7.3.~~

710.7 Ducts and air transfer openings. The space around a duct penetrating a smoke partition shall be filled with an approved material to limit the free passage of smoke. Air transfer openings in smoke partitions shall be provided with a smoke damper complying with Section 716.3.2.

Exception: Where the installation of a smoke damper will interfere with the operation of a required smoke control system in accordance with Section 909, approved alternative protection shall be utilized.

711.4 Continuity. Assemblies shall be continuous without openings, penetrations or joints except as permitted by this section and Sections 707.2, 712.4, ~~and~~ 713 and 1019.1. Skylights and other penetrations through a fire-resistance-rated roof deck or slab are permitted to be unprotected, provided that the structural integrity of the fire-resistance-rated roof construction is maintained. Unprotected skylights shall not be permitted in roof construction required to be fire-resistance rated in accordance with Section 704.10. The supporting construction shall be protected to afford the required fire-resistance rating of the horizontal assembly supported.

711.7 Ducts and air transfer openings. Penetrations in horizontal assemblies by ducts and air transfer openings shall comply with Section~~s 712 and~~ 716.

~~**712.4.6**~~ **711.8 Floor fire door assemblies.** Floor fire door assemblies used to protect openings in fire-resistance-rated floors shall be tested in accordance with NFPA 288, and shall achieve a fire-resistance-rating not less than the assembly being penetrated. Floor fire door assemblies shall be labeled by an approved agency. The label shall be permanently affixed and shall specify the manufacturer, the test standard and the fire-resistance rating.

712.1 Scope. The provisions of this section shall govern the materials and methods of construction used to protect through penetrations and membrane penetrations of horizontal assemblies and fire-resistance rated wall assemblies.

712.3 Fire-resistance-rated walls. Penetrations into or through fire walls, fire barrier~~s~~ walls, smoke barrier walls, and fire partitions shall comply with ~~this section~~ Sections 712.3.1 through 712.3.4.

712.3.1 Through penetrations. Through penetrations of fire-resistance-rated walls shall comply with Section 712.3.1.1 or 712.3.1.2.

Exception: Where the penetrating items are steel, ferrous or copper pipes, tubes or ~~steel~~ conduits, the annular space between the penetrating item and the fire-resistance-rated wall ~~shall be~~ is permitted to be protected as follows:

1. In concrete or masonry walls where the penetrating item is a maximum 6-inch (152 mm) nominal diameter and the area of the opening ~~is a maximum~~ through the wall does not exceed 144 square inches (0.0929 m^2), concrete, grout or mortar ~~shall be~~ is permitted where installed the full thickness of the wall or the thickness required to maintain the fire-resistance rating; or

2. The material used to fill the annular space shall prevent the passage of flame and hot gases sufficient to ignite cotton waste when subjected to ASTM E 119 time- temperature fire conditions under a minimum positive pressure differential of 0.01 inch (2.49 Pa) of water at the location of the penetration for the time period equivalent to the fire-resistance rating of the construction penetrated.

712.3.2 Membrane penetrations. Membrane penetrations shall comply with Section 712.3.1. Where walls ~~and~~ or partitions are required to have a ~~minimum 1-hour~~ fire-resistance rating, recessed fixtures shall be installed such that the required fire resistance will not be reduced.

Exceptions:

1. Membrane penetrations of maximum two-hour fire-resistance-rated walls and partitions by ~~S~~ steel electrical boxes that do not exceed 16 square inches (0.0103 m^2) in area provided the ~~total~~ aggregate area of ~~such~~ the openings through the membrane does not exceed 100 square inches (0.0645 m^2) ~~for~~ in any 100 square feet (9.29 m^2) of wall area. The annular space between the wall membrane and the box shall not exceed 1/8 inch (3.1 mm) ~~Outlet~~ Such boxes on opposite sides of the wall or partition shall be separated ~~as~~ by one of the following ~~shown~~:

   1.1. By a horizontal distance of not less than 24 inches (610 mm);

1.2. By a horizontal distance of not less than the depth of the wall cavity where the wall cavity is filled with cellulose loose fill, rockwool or slag mineral wool insulation;

1.3. By solid fireblocking in accordance with Section 717.2.1;

1.4. By protecting both ~~outlet~~ boxes with listed putty pads; or

1.5. By other listed materials and methods.

2. Membrane penetrations ~~for~~ by listed electrical ~~outlet~~ boxes of any material ~~are permitted~~ provided such boxes have been tested for use in fire-resistance-rated assemblies and are installed in accordance with the instructions included in the listing. The annular space between the wall membrane and the box shall not exceed 1/8 inch (3.1 mm) unless listed otherwise. ~~Outlet~~ Such boxes on opposite sides of the wall or partition shall be separated as follows:

2.1. By a horizontal distance of not less than 24 inches (610 mm);

2.2. By solid fireblocking in accordance with Section 717.2.1;

2.3. By protecting both ~~outlet~~ boxes with listed putty pads; or

2.4. By other listed materials and methods.

3. The annular space created by the penetration of a fire sprinkler provided it is covered by a metal escutcheon plate.

712.3.3 Ducts and air transfer openings. Penetrations of fire-resistance-rated walls by ducts that are not protected with dampers shall comply with Sections 712.2 through 712.3.1. Ducts and air transfer openings that are ~~not~~ protected with ~~fire~~ dampers shall comply with ~~this section~~ Section 716.

Penetrations may be made in gypsum wallboard membranes for one-hour protection for bathroom and clothes dryer exhaust ducts without fire dampers provided:

1. A minimum of 0.019-inch (26 gauge) steel ducts are used continuously from the opening to the exterior or into a rated shaft.

2. Voids around the duct penetration shall be sealed with approved materials to prevent the passage of flame.

3. The maximum size of the bathroom fan assembly shall be 100 square inches.

4. The maximum size of the clothes dryer duct shall be 20 square inches.

712.4.1 Fire-resistance rated assemblies. Penetrations of fire-resistance-rated floor, floor/ceiling assembly, or the ceiling membrane of a roof/ceiling assembly shall comply with Sections 712.4.1.1 through 714.4.1.5.

712.4.1.1. Through penetrations. Through penetrations of fire-resistance-rated horizontal assemblies shall comply with Section ~~712.4.1.1 or 712.4.1.2~~ 712.4.1.1.1 or 712.4.1.1.2.

Exceptions:

1. Penetrations by steel, ferrous or copper conduits, pipes, tubes~~,~~ or vents, or concrete~~,~~ or masonry items through a single fire-resistance-rated floor assembly where the annular space is protected with materials that prevent the passage of flame and hot gases sufficient to ignite cotton waste when subjected to ASTM E 119 time-temperature fire conditions under a minimum positive pressure differential of 0.01 inch (2.49 Pa) of water at the location of the penetration for the time period equivalent to the fire-resistance-rating of the construction penetrated. Penetrating items with a maximum 6-inch (152 mm) nominal diameter shall not be limited to the penetration of a single fire-resistance-rated floor assembly provided ~~that~~ the aggregate area of the ~~penetration~~ openings through the assembly does not exceed 144 square inches (92 900 mm^2) in any 100 square feet (9.3 m^2) of floor area.

2. Penetrations in a single concrete floor by steel, ferrous or copper conduits, pipes, tubes ~~and~~ or vents with a maximum 6-inch (152 mm) nominal diameter provided concrete, grout or mortar is installed the full thickness of the floor or the thickness required to maintain the fire-resistance rating. The penetrating items ~~with a maximum 6-inch (152 mm) nominal diameter~~ shall not be limited to the penetration of a single concrete floor provided that the area of the ~~penetration~~ opening through each floor does not exceed 144 square inches (0.0929 m^2).

3. Penetrations by listed ~~E~~electrical ~~outlet~~ boxes of any material ~~are permitted~~ provided ~~that~~ such boxes ~~are~~ have been tested for use in fire-resistance-rated assemblies and installed in accordance with the ~~tested assembly~~ instructions included in the listing.

712.4.1.1.1 ~~**Fire-resistance-rated assemblies**~~ **Installation.** Through ~~P~~ penetrations shall be installed as tested in an approved fire-resistance-rated assembly.

~~**712.4.1.2**~~ **712.4.1.1.2 Through-penetration firestop system.** Through penetrations shall be protected by an approved through-penetration firestop system installed and tested in accordance with ASTM E 814 or UL 1479, with a minimum positive pressure differential of 0.01 inch (2.49 Pa) of water. The system

shall have an F rating and a T rating of not less than 1 hour but not less than the required rating of the floor penetrated.

Exceptions:

1. Floor penetrations contained and located within the cavity of a wall do not require a T rating.

2. Floor penetrations consisting of either a pipe, tube, conduit or electrical conductor that are not in direct contact with combustible material do not require a T rating.

~~**712.4.2**~~ **712.4.1.2 Membrane penetrations.** Penetrations of membranes that are part of a fire-resistance-rated horizontal assembly shall comply with Section ~~712.4.1.1 or 712.4.1.2~~ 712.4.1.1.1. or 712.4.1.1.2. Where floor/ceiling assemblies are required to have a minimum 1-hour fire-resistance rating, recessed fixtures shall be installed such that the required fire resistance will not be reduced.

Exceptions:

1. Membrane penetrations by steel, ferrous or copper conduits, ~~electrical outlet boxes,~~ pipes, tubes~~,~~ or vents~~,~~ or concrete, or masonry-~~penetrating~~ items where the annular space is protected either in accordance with Section 712.4.1.1 or to prevent the free passage of flame and the products of combustion. ~~Such penetrations shall not exceed an~~ The aggregate area of the openings through the membrane shall not exceed 100 square inches (64 500 mm^2) in any 100 square feet (9.3 m^2) of ceiling area in assemblies tested without penetrations.

2. Ceiling membrane penetrations of maximum two-hour fire resistance-rated horizontal assemblies by steel electrical boxes that do not exceed 16 square inches (0.0103 m^2) in area are permitted provided the aggregate area of such penetrations does not exceed 100 square inches (0.0645 m^2) in any 100 square feet (9.29 m^2) of ceiling area and the annular space between the ceiling membrane and the box does not exceed 1/8 inch (3.12 mm).

~~2~~ 3. Membrane penetrations by listed electrical ~~outlet~~ boxes of any material ~~are permitted~~ provided such boxes have been tested for use in fire-resistance-rated assemblies and are installed in accordance with the instructions included in the listing. The annular space between the ceiling membrane and the box shall not exceed 1/8 inch (3.1 mm) unless listed otherwise.

~~3~~ 4. The annular space created by the penetration of a fire sprinkler provided it is covered by a metal escutcheon plate.

***NOTE: DELETE SECTIONS 712.4.3 THROUGH 712.4.3.2**

712.4.1.3 Ducts and air transfer openings. ~~Penetrations of horizontal assemblies by ducts and air transfer openings that are not required to have dampers shall comply with this section. Ducts and air transfer openings that are protected with dampers shall comply~~

~~with Section 716~~. Penetrations of horizontal assemblies by ducts and air transfer openings shall comply with Section 716.

712.4.1.4 Dissimilar materials. Noncombustible penetrating items shall not connect to combustible materials beyond the point of firestopping unless it can be demonstrated that the fire-resistance integrity of the horizontal assembly is maintained.

712.4.2 Nonfire-resistance-rated assemblies. Penetrations of horizontal assemblies without a required fire- resistance rating shall meet the requirements of Section 707 or shall comply with Sections 712.4.2.1 through 712.4.2.3.

712.4.2.1 Noncombustible penetrating items. Noncombustible penetrating items that connect not more than three stories are permitted provided that the annular space is filled with an approved noncombustible material to resist the free passage of flame and the products of combustion.

712.4.3 Penetrating items. Penetrating items that connect not more than two stories are permitted provided that the annular space is filled with an approved material to resist the free passage of flame and the products of combustion.

712.4.4 Ducts and air transfer openings. Penetrations of horizontal assemblies by ducts and air transfer openings that are not required to have dampers shall comply with this section. Ducts and air transfer openings that are protected with dampers shall comply with Section 716.

Penetrations may be made in gypsum wallboard membranes for one-hour protection for bathroom and clothes dryer exhaust ducts without fire dampers provided:

1. A minimum of 0.019-inch (26 gauge) steel ducts are used continuously from the opening to the exterior or into a rated shaft.

2. Voids around the duct penetration shall be sealed with approved materials to prevent the passage of flame.

3. The maximum size of the bathroom fan assembly shall be 100 square inches.
4. The maximum size of the clothes dryer duct shall be 20 square inches.

~~**712.4.6 Floor fire doors.** Floor fire doors used to protect openings in fire-resistance-rated floors shall be tested in the horizontal position in accordance with ASTM E 119, and shall achieve a fire-resistance rating not less than the assembly being penetrated. Floor fire doors shall be labeled by an approved agency~~.

712.5 Penetrations in smoke barriers. Penetrations in smoke barriers shall be tested in accordance with the requirements of UL 1479 for air leakage. The air leakage rate of the penetration assembly shall not exceed 5.0 cfm per square foot (0.025 m^3 / s*m^2) of penetration opening at 0.30 inch (7.47 Pa) of water for both the ambient temperature and elevated temperature tests.

713.4 Exterior curtain wall/floor intersection. Where fire-resistance-rated floor or floor/ceiling assemblies are required, voids created at the intersection of the exterior curtain wall assemblies and such floor assemblies shall be sealed with an approved material or system to prevent the interior spread of fire. Such material or systems shall be securely installed and capable of preventing the passage of flame and hot gases sufficient to ignite cotton waste where subjected either to ASTM E 119 time-temperature fire conditions under a minimum positive pressure differential of 0.01 inch (0.254 mm) of water column (2.49

Pa), or installed as tested in accordance with ASTM E 2307 for the time period at least equal to the fire-resistance rating of the floor assembly. Height and fire-resistance requirements for curtain wall spandrels shall comply with Section 704.9.

713.5 Spandrel wall. Height and fire-resistance requirements for curtain wall spandrels shall comply with Section 704.9. Where Section 704.9 does not require a fire-resistance-rated spandrel wall, the requirements of Section 713.4 shall still apply to the intersection between the spandrel wall and the floor.

713.6 Fire-resistant joint systems in smoke barriers. Fire-resistant joint systems in smoke barriers shall be tested in accordance with the requirements of UL 2079 for air leakage. The air leakage rate of the joint shall not exceed 5.0 cfm per lineal foot (0.00775 m^3 /slm) of joint at .30 inch (7.47 Pa) of water for both the ambient temperature and elevated temperature tests.

714.1 Requirements. The fire-resistance rating of structural members and assemblies shall comply with the requirements for the type of construction and shall not be less than the rating required for the fire-resistance-rated assemblies supported.

> **Exception:** Fire barriers, ~~and~~ fire partitions and smoke barriers as provided in Sections 706.4, ~~and~~ 708.4 and 709.4, respectively.

714.2.1.1 Light-framed construction. King studs and boundary elements that are integral elements in load-bearing walls of light-framed construction shall be permitted to have required fire-resistance-ratings provided by the membrane protection provided for the load-bearing wall.

714.2.2 Column protection above ceilings. Where columns require a fire-resistance rating, the entire column, including its connections to beams or girders, shall be protected. Where the column extends through a ceiling, fire resistance of the column shall be continuous from the top of the foundation or floor/ceiling assembly below through the ceiling space to the top of the column.

714.4 Impact protection. Where the fire protective covering of a structural member is subject to impact damage from moving vehicles, the handling of merchandise or other activity, the fire protective covering shall be protected by corner guards or by a substantial jacket of metal or other noncombustible material to a height adequate to provide full protection, but not less than 5 feet (1524 mm) from the finished floor.

> **Exception:** Concrete columns.

715.3 Fire door and shutter assemblies. Approved fire door and fire shutter assemblies shall be constructed of any material or assembly of component materials that conforms to the test requirements of Section 715.3.1, 715.3.2 or 715.3.3 and the fire protection rating indicated in Table 715.3. Fire door assemblies and shutters shall be installed in accordance with the provisions of this section and NFPA 80.

> **Exceptions:**
>
> 1. Labeled protective assemblies that conform to the requirements of this section or UL 10A, UL 14B and UL 14C for tin-clad fire door assemblies.
>
> 2. Floor fire door~~s~~ assemblies in accordance with Section ~~712.4.6~~ 711.8.

TABLE 715.3

FIRE DOOR AND FIRE SHUTTER FIRE PROTECTION RATINGS

TYPE OF ASSEMBLY	REQUIRED ASSEMBLY RATING (hours)	MINIMUM FIRE DOOR AND FIRE SHUTTER ASSEMBLY RATING (hours)
Fire partitions:		
Corridor walls	1	1/3[b]
	0.5	1/3[b]
Other fire partitions	1	3/4
	0.5	1/3
Smoke barriers	1	1/3[b]

NOTE: PORTIONS OF THE TABLE NOT SHOWN REMAIN UNCHANGED.

715.3.3 Door assemblies in corridors and smoke barriers. Fire door assemblies required to have a minimum fire protection rating of 20 minutes where located in corridor walls or smoke barrier walls having a fire-resistance rating in accordance with Table 715.3 shall be tested in accordance with NFPA 252 or UL 10C without the hose stream test. ~~If a 20-minute fire door assembly contains glazing material, the glazing material in the door itself shall have a minimum fire protection rating of 20 minutes and be exempt from the hose stream test. Glazing material in any other part of the door assembly, including transom lites and sidelites, shall be tested in accordance with NFPA 257, including the hose stream test, in accordance with Section 715.4. Fire door assemblies shall also meet the requirements for a smoke- and draft-control door assembly tested in accordance with UL 1784 with an artificial bottom seal installed across the full width of the bottom of the door assembly. The air leakage rate of the door assembly shall not exceed 3.0 cfm per square foot (0.01524 m3/sΛm²) of door opening at 0.10 inch (24.9 Pa) of water for both the ambient temperature and elevated temperature tests.~~ Louvers shall be prohibited, unless the louvers are tested in the assembly.

Exceptions:

1. Viewports that require a hole not larger than 1 inch (25 mm) in diameter through the door, have at least an 0.25-inch-thick (6.4 mm) glass disc and the holder is of metal that will not melt out where subject to temperatures of 1,700°F (927°C).

2. Corridor door assemblies in occupancies of Group I-2 shall be in accordance with Section 407.3.1.

3. Unprotected openings shall be permitted for corridors in multi-theater complexes where each motion picture auditorium has at least one-half of its required exit or exit access doorways opening directly to the exterior or into an exit passageway.

715.3.3.1 Glazing in door assemblies. In a 20-minute fire door assembly, the glazing material in the door itself shall have a minimum fire protection rating of 20 minutes and shall be exempt from the hose stream test. Glazing material in any other part of the door assembly, including transom lites and sidelites, shall be tested in accordance with NFPA 257, including the hose stream test, in accordance with Section 715.4.

715.3.4 Doors in ~~vertical~~ exit enclosures and exit passageways. Fire door assemblies in ~~vertical~~ exit enclosures and exit passageways shall have a maximum transmitted temperature end point of not more than 450°F (250°C) above ambient at the end of 30 minutes of standard fire test exposure.

Exception: The maximum transmitted temperature ~~end point~~ rise is not ~~required~~ limited in buildings equipped throughout with an automatic sprinkler system installed in accordance with Section 903.3.1.1 or 903.3.1.2.

715.3.4.1 Glazing in doors. Fire-protection-rated glazing in excess of 100 square inches (0.065 m2) shall be permitted in fire door assemblies when tested in accordance with NFPA 252 as components of the door assemblies and not as glass lights, and shall have a maximum transmitted temperature ~~end point~~ rise of 450°F (250°C) in accordance with Section 715.3.4.

Exception: The maximum transmitted temperature ~~end point~~ rise is not ~~required~~ limited in buildings equipped throughout with an automatic sprinkler system installed in accordance with Section 903.3.1.1 or 903.3.1.2.

715.3.5.1 Fire door labeling requirements. Fire doors shall be labeled showing the name of the manufacturer, the name of the third-party inspection agency, the fire protection rating and, where required for fire doors in exit enclosures and exit passageways by Section 715.3.4, the maximum transmitted temperature ~~end point~~ rise. Smoke and draft control doors complying with UL 1784 shall be labeled as such. Labels shall be approved and permanently affixed. The label shall be applied at the factory or location where fabrication and assembly are performed.

715.3.6.3 Labeling. Fire-protection-rated glazing shall bear a label or other identification showing the name of the manufacturer, the test standard, and information required in Section 715.4.9.1, that ~~the fire protection rating. Such label or other identification~~ shall be issued by an approved agency and shall be permanently affixed.

715.3.6.3.1 Identification. For fire protection-rated glazing, the label shall bear the following four-part identification: "D-H or NH - T or NT-XXX". "D" indicates that the glazing shall be used in fire door assemblies and that the glazing meets the fire resistance requirements of the test standard. "H" shall indicate that the glazing meets the hose stream requirements of the test standard. "NH" shall indicate that the glazing does not meet the hose stream requirements of the test. "T" shall indicate that glazing meets the temperature requirements of Section 715.3.4.1. "NT" shall indicate that the glazing does not meet the temperature requirements of Section 715.3.4.1. The placeholder "XXX" shall specify the fire protection rating period, in minutes.

715.3.7 Door closing. Fire doors shall be self-closing or automatic-closing in accordance with this section.

Exceptions:

1. Fire doors located in common walls separating sleeping units in Group R-1 shall be permitted without automatic-closing or self-closing devices.

2. Door closers are not required on corridor doors to electrical closets, janitorial closets, telephone and mechanical rooms that are kept closed and locked and are not accessible to the public.

715.3.7.3 Smoke-activated doors. Automatic-closing fire doors installed in the following locations shall be automatic-closing by the actuation of smoke detectors installed in accordance with Section 907.10 or by loss of power to the smoke detector or hold-open device. Fire doors that are automatic-closing by smoke detection shall not have more than a 10-second delay before the door starts to close after the smoke detector is actuated.

1. Doors installed across a corridor.

2. Doors that protect openings in horizontal exits, exits or ~~exit access~~ corridors required to be of fire-resistance-rated construction.

3. Doors that protect openings in walls required to be fire-resistance rated by Table 302.1.1.

4. Doors installed in smoke barriers in accordance with Section 709.5.

5. Doors installed in fire partitions in accordance with Section 708.6.

6. Doors installed in a fire wall in accordance with Section 705.8.

715.4 Fire-protection rated glazing. Glazing in fire window assemblies shall be fire protection rated in accordance with this section and Table 715.4. Glazing in fire door assemblies shall comply with Section 715.3.6. Fire-protection-rated glazing ~~installed as an opening protective in fire partitions, smoke barriers and fire barriers~~ shall be tested in accordance with and shall meet the acceptance criteria of NFPA 257. ~~for a fire protection rating of 45 minutes.~~ Fire-protection-rated glazing shall also comply with NFPA 80. Openings in nonfire-resistance-rated exterior wall assemblies that require protection in accordance with Section 704.3, 704.8, 704.9 or 704.10 shall have a ~~Fire-protection-rated glazing required in accordance with Section 704.12 for exterior wall opening protection shall be tested in accordance with and shall meet the acceptance criteria of NFPA 257 for a~~ fire-protection rating of not less than 3/4 hour. ~~as required in Section 715.4.8~~.

Exceptions:

1. Wired glass in accordance with Section 715.4.3.

2. Fire-protection-rated glazing in 0.5-hour fire-resistance-rated partitions is permitted to have an 0.33-hour fire protection rating.

3. Fire protection rated glazing in corridors may use regular glass when all of the following conditions are met:

   3.1 Both sides of the glass shall be protected by a sprinkler system equipped with listed quick response sprinklers. The sprinklers shall be spaced 6 feet or less along both sides of the glass, not more than 1 foot from the glass and located so that the entire surface of the glass is wet upon operation.

3.2 The glass shall meet the safety and design requirements of Chapter 24.

3.3 Obstructions such as curtain rods, curtains, drapes, or similar materials shall not be installed between the sprinkler and the glass.

TABLE 715.4

FIRE WINDOW ASSEMBLY FIRE PROTECTION RATINGS

TYPE OF ASSEMBLY	REQUIRED ASSEMBLY RATING (hours)	MINIMUM FIRE WINDOW ASSEMBLY RATING (hours)
Interior walls:		
Fire walls	All	NP[a]
Fire barriers ~~and fire partitions~~	~~>1~~ 4 3 2 1	~~NP[a]~~ 3 3 1 ½ 3/4
Smoke barriers and fire partitions	1	3/4
Exterior walls	>1 1	1 ½ 3/4
Party walls	All	NP[a]

a. Not permitted except as specified in Section 715.2.

715.4.3 Wired glass. ~~Steel~~ Metal window frame assemblies of 0.125-inch (3.2 mm) minimum solid section or of not less than nominal 0.048-inch-thick (1.2 mm) formed sheet steel members fabricated by pressing, mitering, riveting, interlocking or welding and having provision for glazing with 1/4-inch (6.4 mm) wired glass where securely installed in the building construction and glazed with 1/4-inch (6.4 mm) labeled wired glass shall be deemed to meet the requirements for a 3/4-hour fire window assembly. Wired glass panels shall conform to the size limitations set forth in Table 715.4.3.

~~**715.4.8 Exterior fire window assemblies.** Exterior openings, other than doors, required to be protected by Section 704.12, where located in a wall required by Table 602 to have a fire-resistance rating of greater than 1 hour, shall be protected with an assembly having a fire protection rating of not less than 11/2 hours. Exterior openings required to be protected by Section 704.8, where located in a wall required by Table 602 to have a fire-resistance rating of 1 hour, shall be protected with an assembly having a fire protection rating of not less than 3/4 hour. Exterior openings required to be protected by Section 704.9 or 704.10 shall be protected with an assembly having a fire protection rating of not less than 3/4 hour. Openings in nonfire-resistance-rated exterior wall assemblies that require protection in accordance with Section 704.8, 704.9 or 704.10 shall have a fire protection rating of not less than 3/4 hour.~~

~~**715.4.9**~~ **Labeling requirements.** Fire-protection-rated glazing shall bear a label or other identification showing the name of the manufacturer, the test standard, and information required in

Section 715.4.8.1, that ~~the fire protection rating. Such label or identification~~ shall be issued by an approved agency and shall be permanently affixed.

715.4.8.1 Identification. For fire protection-rated glazing, the label shall bear the following two-part identification: "OH - XXX". "OH" indicates that the glazing met both the fire-resistance and the hose-stream requirements of NFPA 257 and is permitted to be used in openings. "XXX" represents the fire-protection rating period, in minutes, that was tested.

715.5 Alternative methods for determining fire protection ratings. The required fire resistance of an opening protective shall be permitted to be established by any of the following methods or procedures:

1. Designs documented in approved sources.

2. Calculations performed in an approved manner.

3. Engineering analysis based on a comparison of opening protective designs having fire-protection ratings as determined by the test procedures set forth in NFPA 252 or NFPA 257.

4. Alternative protection methods as allowed by Section 104.11.

716.1 General. The provisions of this section shall govern the protection of duct penetrations and air transfer openings in ~~fire-resistance-rated~~ assemblies required to be protected.

716.1.1 Ducts ~~and air transfer openings~~ without dampers. Ducts ~~and air transfer openings~~ that penetrate fire-resistance-rated assemblies and are not required by this section to have dampers shall comply with the requirements of Section 712.

716.2 Installation. Fire dampers, smoke dampers, combination fire/smoke dampers and ceiling radiation dampers located within air distribution and smoke control systems shall be installed in accordance with the requirements of this section, the manufacturer's installation instructions and their listing.

716.3.2.1 Smoke damper actuation methods. The smoke damper shall close upon actuation of a listed smoke detector or detectors installed in accordance with Section 907.10 and one of the following methods, as applicable:

1. Where a damper is installed within a duct, a smoke detector shall be installed in the duct within 5 feet (1524 mm) of the damper with no air outlets or inlets between the detector and the damper. The detector shall be listed for the air velocity, temperature and humidity anticipated at the point where it is installed. Other than in mechanical smoke control systems, dampers shall be closed upon fan shutdown where local smoke detectors require a minimum velocity to operate.

2. Where a damper is installed above smoke barrier doors in a smoke barrier, a spot-type detector listed for releasing service shall be installed on either side of the smoke barrier door opening.

3. Where a damper is installed within an unducted opening in a wall, a spot-type detector listed for releasing service shall be installed within 5 feet (1524 mm) horizontally of the damper.

4. Where a damper is installed in a corridor wall or ceiling, the damper shall be permitted to be controlled by a smoke detection system installed in the corridor.

5. Where a total-coverage smoke detector system is provided within areas served by a heating, ventilation and air-conditioning (HVAC) system, dampers shall be permitted to be controlled by the smoke detection system.

716.4 Access and identification. Fire and smoke dampers shall be provided with an approved means of access, large enough to permit inspection and maintenance of the damper and its operating parts in accordance with the *Mechanical Code*. The access shall not affect the integrity of fire-resistance-rated assemblies. The access openings shall not reduce the fire-resistance rating of the assembly. Access points shall be permanently identified on the exterior of the duct and at ceiling level by a label having letters not less than ~~0.5~~ 1.0 inch (~~12.7~~ 25.4 mm) in height reading: FIRE/SMOKE DAMPER, SMOKE DAMPER or FIRE DAMPER. Access doors in ducts shall be tight fitting and suitable for the required duct construction.

716.5 Where required. Fire dampers, smoke dampers, combination fire/smoke dampers and ceiling radiation dampers shall be provided at the locations prescribed in ~~this section~~ Sections 716.5.1 through 716.5.5 and in Table 716.5. Where an assembly is required to have both fire dampers and smoke dampers, combination fire/smoke dampers or a fire damper and a smoke damper shall be required.

TABLE 716.5
FIRE AND SMOKE DAMPER LOCATIONS

Location		Fire Dampers	Smoke Dampers
Fire Walls		Required	
Fire Barriers - *separated uses, incidental use areas, horizontal exits, atrium enclosures, exit passageways, and elevator lobbies, etc.*		Required [1,2,3]	
Shaft enclosures		Required [1,2,3,4,5]	Required [4, 18]
Fire Partitions - *corridor, R-1/R-2 unit separations, and mall tenant separations, etc.*		Required [6,7]	
Corridor enclosure		Required [6,7]	Required [8, 16]
Smoke barriers			Required [9]
Horizontal assemblies [10]	Through penetrations	Required [11]	
	Membrane penetrations	Required [12]	
	Nonfire-resistance-rated assemblies	Required [13, 14, 15]	

1. Not required for penetrations tested in accordance with ASTM E 119 as part of the rated assembly.
2. Not required for ducts used as a part of an approved smoke control system in accordance with Section 909.
3. Not required in sprinklered building of other than Group H penetrated by ducted HVAC systems.
4. Not required for steel exhaust subducts extending at least 22 inches vertically in exhaust shafts having continuous airflow upward to the outside.
5. Not required in parking garage supply or exhaust shafts that are separated form other building shafts by a minimum of 2-hour fire-resistance-rated construction.
6. Not required in sprinklered buildings of other than Group H for tenant separations and corridor walls.
7. Not required in buildings of other than Group H where duct penetration is limited to 100 square inches; is of minimum 0.0217-inch steel; does not have communicating openings between a corridor and adjacent spaces; is installed above a ceiling ; and does not terminate at a wall register of the fire-resistance-rated wall.
8. Not required for corridor penetrations of minimum 0.019-inch steel ducts with no openings into corridor.
9. Not required where openings in steel ducts are limited to a single smoke compartment.
10. General requirement mandates shaft enclosures for openings in floor and roof systems.
11. In other than Group I-2 and Group I-3, fire dampers are permitted in lieu of shaft enclosures for penetration of fire-resistance-rated horizontal assembly that connects two floors.
12. Where shaft enclosure is not provided, an approved ceiling damper is required at the ceiling line of a fire-resistance-rated floor/ceiling assembly.
13. Not required, provided that the shaft enclosure, does not connect more than two stories and the annular space around the duct is filled with noncombustible material.
14. Limited to three connected stories without shaft enclosures, provided fire dampers are installed at each floor line and annular space is filled.
15. Not required in ducts within individual dwelling units.
16. Not required in building with a smoke control system if not necessary for operation and control of system.
17. Shafts with openings on only one floor in buildings three stories or less.
18. Not required where openings have a maximum size of 36 square inches and the building is fully sprinklered.

716.5.1 Fire walls. Ducts and air transfer openings permitted in fire walls in accordance with Section 705.11 shall be protected with ~~approved~~ listed fire dampers installed in accordance with their listing.

716.5.2 Fire barriers. Ducts and air transfer openings ~~in~~ that penetrate fire barriers shall be protected with ~~approved~~ listed fire dampers installed in accordance with their listing.

Exception: Fire dampers are not required at penetrations of fire barriers where any of the following apply:

1. Penetrations are tested in accordance with ASTM E 119 as part of the fire-resistance-rated assembly.

2. Ducts are used as part of an approved smoke control system in accordance with Section 909 and where a fire damper would interfere with the operation of the smoke control system.

3. Such walls are penetrated by ducted HVAC systems, ~~have a required fire-resistance rating of 1 hour or less,~~ are in areas of other than Group H and are in buildings equipped throughout with an automatic sprinkler system in accordance with Section 903.3.1.1 or 903.3.1.2. For the purposes of this exception, a ducted HVAC system shall be a duct system for conveying supply, return or exhaust air

as part of the structure's HVAC system. Such a duct system shall be constructed of sheet steel not less than 26 gage thickness and shall be continuous from the air-handling appliance or equipment to the air outlet and inlet terminals.

716.5.3 Shaft enclosures. ~~Ducts and air transfer openings shall not penetrate a shaft serving as an exit enclosure except as permitted by Section 1019.1.2.~~

~~**716.5.3.1 Penetrations of shaft enclosures.**~~ Shaft enclosures that are permitted to be penetrated by ducts and air transfer openings shall be protected with ~~approved~~ listed fire and smoke dampers installed in accordance with their listing.

Exceptions:

1. Fire dampers are not required at penetrations of shafts where:

   1.1. Steel exhaust subducts extended at least 22 inches (559 mm) vertically in exhaust shafts, provided there is a continuous airflow upward to the outside;

   1.2. Penetrations are tested in accordance with ASTM E 119 as part of the fire-resistance-rated assembly;

   1.3. Ducts are used as part of an approved smoke control system ~~designed and installed~~ in accordance with Section 909, and where the fire damper will interfere with the operation of the smoke control system;

   1.4. The penetrations are in parking garage exhaust or supply shafts that are separated from other building shafts by not less than 2-hour fire-resistance-rated construction; or

   1.5 Buildings are equipped with automatic sprinkler systems.

2. In Group B and R occupancies, equipped throughout with an automatic sprinkler system in accordance with Section 903.3.1.1, smoke dampers are not required at penetrations of shafts where:

   ~~2.1.~~ Kitchen, clothes dryer, ~~B~~ bathroom and toilet room exhaust openings with steel exhaust subducts, having a wall thickness of at least 0.019 inches (0.48 mm) that extend at least 22 inches (559 mm) vertically, and the exhaust fan at the upper terminus, powered continuously in accordance with the provisions of Section 909.11, so as to maintain a continuous upward airflow to the outside.~~, or~~

~~2.2. Ducts are used as part of an approved smoke control system, designed and installed in accordance with Section 909, and where the smoke damper will interfere with the operation of the smoke control system, or~~

3. Smoke dampers are not required at penetrations of exhaust or supply shafts in parking garages that are separated from other building shafts by not less than 2-hour fire- resistance-rated construction.

4. Smoke dampers are not required at penetrations of shafts where:

   4.1 Shafts with openings on only one floor in buildings three stories or less.

   4.2 Exhaust only openings serving domestic clothes dryers and environmental air ducts equipped with individual backdraft dampers where shaft protection is provided by the use of steel exhaust air subducts extending vertically upward at least 22 inches above the top of the opening in a shaft served by a continuously operating fan where the airflow is upward.

   4.3 Openings that have a maximum size of 36 square inches and the building is equipped throughout with a sprinkler system.

5. Smoke dampers are not required at penetrations of shafts where ducts are used as part of an approved mechanical smoke control system designed in accordance with Section 909 and where the smoke damper will interfere with the operation of the smoke control system.

716.5.4 Fire partitions. Ducts and air transfer openings that ~~penetrations in~~ penetrate fire partitions shall be protectedwith ~~approved~~ listed fire dampers installed in accordance with their listing.

Exceptions: In occupancies other than Group H, fire dampers are not required where any of the following apply:

1. The partitions are tenant separation ~~and~~ or corridor walls in buildings equipped throughout with an automatic sprinkler system in accordance with Section 903.3.1.1 or 903.3.1.2 and the duct is protected as a through penetration in accordance with Section 712.

2. Tenant partitions in covered mall buildings where the walls are not required by provisions elsewhere in the code to extend to the underside of the floor or roof deck above.

~~2.~~ 3. The duct system is constructed of approved materials in accordance with the ~~*International*~~ *Mechanical Code* and the duct penetrating the wall ~~meets~~ complies with all of the following ~~minimum~~ requirements:

~~2.1.~~ 3.1 The duct shall not exceed 100 square inches (0.06 m^2).

~~2.2.~~ 3.2 The duct shall be constructed of steel a minimum of 0.0217 inch (0.55 mm) in thickness.

~~2.3.~~3.3 The duct shall not have openings that communicate the corridor with adjacent spaces or rooms.

~~2.4.~~3.4 The duct shall be installed above a ceiling.

~~2.5.~~3.5 The duct shall not terminate at a wall register in the fire-resistance-rated wall.

~~2.6.~~3.6 A minimum 12-inch-long (0.30 m) by 0.060-inch-thick (1.52 mm) steel sleeve shall be centered in each duct opening. The sleeve shall be secured to both sides of the wall and all four sides of the sleeve with minimum 1 ½ -inch by 1 ½ -inch by 0.060-inch (0.038 m by 0.038 m by 1.52 mm) steel retaining angles. The retaining angles shall be secured to the sleeve and the wall with No. 10 (M5) screws. The annular space between the steel sleeve and wall opening shall be filled with rock (mineral) wool batting on all sides.

716.6 Horizontal assemblies. Penetrations by ducts and air transfer openings of a floor, floor/ceiling assembly or the ceiling membrane of a roof/ceiling assembly shall be protected by a shaft enclosure that complies with Section 707 or shall comply with ~~this section~~ Sections 716.6.1 through 716.6.3.

716.6.1 Through penetrations. In occupancies other than Groups I-2 and I-3, a duct ~~and air transfer opening system~~ constructed of ~~approved~~ listed materials in accordance with the ~~*International*~~ *Mechanical Code* that penetrates a fire-resistance-rated floor/ceiling assembly that connects not more than two stories is permitted without shaft enclosure protection provided a listed fire damper is installed at the floor line or the duct is protected in accordance with Section 712.4. For air transfer openings, see exception 7 to Section 707.2.

Exception: A duct is permitted to penetrate three floors or less without a fire damper at each floor provided it meets all of the following requirements.

1. The duct shall be contained and located within the cavity of a wall and shall be constructed of steel not less than 0.019 inch (0.48 mm) (26 gage) in thickness.

2. The duct shall open into only one dwelling unit or sleeping unit and the duct system shall be continuous from the unit to the exterior of the building.

3. The duct shall not exceed 4-inch (102 mm) nominal diameter and the total area of such ducts shall not exceed 100 square inches (0.065 m^2) in any 100 square feet (9.3 m^2) of floor area.

4. The annular space around the duct is protected with materials that prevent the passage of flame and hot gases sufficient to ignite cotton waste where subjected to ASTM E 119 time-temperature conditions under a minimum positive pressure differential of 0.01 inch (2.49 Pa) of water at the location of the penetration for the time period equivalent to the fire-resistance rating of the construction penetrated.

5. Grille openings located in a ceiling of a fire-resistance-rated floor/ceiling or roof/ceiling assembly shall be protected with a listed ceiling radiation damper installed in accordance with Section 716.6.2.

716.6.2 Membrane penetrations. ~~Where d~~ Ducts ~~systems~~ and air transfer openings constructed of approved materials in accordance with the ~~*International* *Mechanical Code*~~ that penetrate ~~a~~ the ceiling membrane of a fire-resistance-rated floor/ceiling or roof/ceiling assembly shall be protected with one of the following:~~, shaft enclosure protection is not required provided an approved ceiling radiation damper is installed at the ceiling line. Where a duct is not attached to a diffuser that penetrates a ceiling of a fire-resistance-rated floor/ceiling or roof/ceiling assembly, shaft enclosure protection is not required provided an approved ceiling radiation damper is installed at the ceiling line. Ceiling radiation dampers shall be tested in accordance with UL 555C and constructed in accordance with the details listed in a fire-resistance-rated assembly or shall be labeled to function as a heat barrier for air-handling outlet/inlet penetrations in the ceiling of a fire-resistance- rated assembly. Ceiling radiation dampers shall not be required where ASTM E 119 fire tests have shown that ceiling radiation dampers are not necessary in order to maintain the fire-resistance rating of the assembly. Ceiling radiation dampers shall not be required where exhaust duct penetrations are protected in accordance with Section 712.4.2 and the exhaust ducts are located within the cavity of a wall, and where exhaust ducts do not pass through another dwelling unit or tenant space.~~

1. A shaft enclosure in accordance with Section 707.

2. A listed ceiling radiation damper installed at the ceiling line where a duct penetrates the ceiling of a fire-resistance-rated floor/ceiling or roof/ceiling assembly.

3. A listed ceiling radiation damper installed at the ceiling line where a diffuser with no duct attached penetrates the ceiling of a fire-resistance-rated floor/ceiling or roof/ceiling assembly.

716.6.2.1 Ceiling radiation dampers. Ceiling radiation dampers shall be tested in accordance with UL 555C and installed in accordance with the manufacturer's installation instructions and listing. Ceiling radiation dampers are not required where either of the following apply:

1. Tests in accordance with ASTM E 119 have shown that ceiling radiation dampers are not necessary in order to maintain the fire-resistance rating of the assembly.

2. Where exhaust duct penetrations are protected in accordance with Section 712.4.2 and the exhaust ducts are located within the cavity of a wall, and do not pass through another dwelling unit or tenant space.

716.6.3 Nonfire-resistance-rated floor assemblies. Duct systems constructed of approved materials in accordance with the ~~*International*~~ *Mechanical Code* that penetrate nonfire-resistance-rated floor assemblies are permitted where any of the following apply: ~~and that connect not more than two stories are permitted without shaft enclosure protection provided that the annular space between the assembly and the penetrating duct is filled with an approved noncombustible material to resist the free passage of flame and the products of combustion. Duct systems constructed of approved materials in accordance with the *International Mechanical Code* that penetrate nonfire-resistance-rated floor assemblies and that connect not more than three stories are permitted without shaft enclosure protection provided that the annular space between the assembly and the penetrating duct is filled with an approved noncombustible material to resist the free passage of flame and the products of combustion, and a fire damper is installed at each floor line.~~

1. A shaft enclosure in accordance with Section 707.

2. The duct connects not more than two stories, and the annular space around the penetrating duct is protected with an approved noncombustible material that resists the free passage of flame and the products of combustion.

3. The duct connects not more than three stories, and the annular space around the penetrating duct is protected with an approved noncombustible material that resists the free passage of flame and the products of combustion, and a listed fire damper is installed at each floor line.

Exception: Fire dampers are not required in ducts within individual residential dwelling units.

717.1 General. Fireblocking and draftstopping shall be installed in combustible concealed locations in accordance with this section. Fireblocking shall comply with Section 717.2. Draftstopping in floor/ceiling spaces and attic spaces shall comply with Sections 717.3 and 717.4, respectively. The permitted use of combustible materials in concealed spaces of ~~noncombustible~~ buildings of Type I or II construction shall be limited to the applications indicated in Section 717.5.

717.2.6 Architectural trim. Fireblocking shall be installed within concealed spaces of exterior wall finish and other exterior architectural elements where permitted to be of combustible construction as specified in Section 1406 or where erected with combustible frames, at maximum intervals of 20 feet (6096 mm), and so that there will be no open space exceeding 100 square feet (9.3 m^3). Where wood furring strips are used, they shall be of approved wood of natural decay resistance or

preservative-treated wood. If noncontinuous, such elements shall have closed ends, with at least 4 inches (102 mm) of separation between sections.

Exceptions:

1. Fireblocking of cornices is not required in single-family dwellings, as applicable in Section 101.2. Fireblocking of cornices of a two-family dwelling as applicable in Section 101.2 is required only at the line of dwelling unit separation.

2. Fireblocking shall not be required where installed on noncombustible framing and the face of the exterior wall finish exposed to the concealed space is covered by one of the following materials:

   2.1. Aluminum having a minimum thickness of 0.019 inch (0.5 mm).

   2.2. Corrosion-resistant steel having a base metal thickness not less than 0.016 inch (0.4 mm) at any point.

   2.3. Other approved noncombustible materials.

717.3.1 Draftstopping materials. Draftstopping materials shall not be less than 0.5-inch (12.7 mm) gypsum board, 0.375-inch (9.5 mm) wood structural panel, 0.375-inch (9.5 mm) particleboard, 1-inch (25-mm) nominal lumber, cement fiberboard, batts or blankets of mineral wool or glass fiber, or other approved materials adequately supported. The integrity of draftstops shall be maintained.

717.5 Combustible~~s~~ materials in concealed spaces in Type I or II construction. Combustible~~s~~ materials shall not be permitted in concealed spaces of buildings of Type I or II construction.

Exceptions:

1. Combustible materials in accordance with Section 603.

2. Combustible materials enclosed within plenums complying with Section 602 of the ~~*International*~~ *Mechanical Code*.

3. Class A interior finish materials classified in accordance with Section 803.

4. Combustible piping within partitions or ~~enclosed~~ shaft~~s~~ enclosures installed in accordance with the provisions of this code.

5. Combustible piping within concealed ceiling spaces installed in accordance with the ~~*International*~~ *Mechanical Code* and the ~~*International*~~ *Plumbing Code.*

6. Combustible insulation and covering on pipe and tubing, installed in concealed spaces other than plenums, complying with Section 719.7.

719.4 Loose-fill insulation. Loose-fill insulation materials that cannot be mounted in the ASTM E 84 apparatus without a screen or artificial supports shall comply with the flame spread and smoke-developed limits of Sections 719.2 and 719.3 when tested in accordance with CAN/ULC S102.2.

Exception: Cellulose loose-fill insulation shall not be required to comply with ~~this test method,~~ the flame spread index requirement of CAN/ULC S102.2 provided such insulation complies with the requirements of Section 719.6.

719.7 Insulation and covering on pipe and tubing. Insulation and covering on pipe and tubing shall have a flame spread index of not more than 25 and a smoke-developed index of not more than 450.

Exception: Insulation and covering on pipe and tubing installed in plenums shall comply with the *Mechanical Code.*

720.1.2 Unit masonry protection. Where required, metal ties shall be embedded in ~~transverse~~ bed joints of unit masonry for protection of steel columns. Such ties shall be as set forth in Table 720.1(1) or be equivalent thereto.

TABLE 720.1(1)
MINIMUM PROTECTION OF STRUCTURAL PARTS BASED ON TIME PERIODS FOR VARIOUS NONCOMBUSTIBLE INSULATING MATERIALS[m]

STRUCTURAL PARTS TO BE PROTECTED	ITEM NUMBER	INSULATING MATERIAL USED	MINIMUM THICKNESS OF INSULATING MATERIAL FOR THE FOLLOWING FIRE-RESISTANCE PERIODS (INCHES)			
			4 hour	3 hour	2 hour	1 hour
1. Steel columns and all of primary trusses (continued)	1-9.1	Minimum W8x35 wide flange steel column (w/d ≥ 0.75) with each web cavity filled even with the flange tip with normal weight carbonate or siliceous aggregate concrete (3,000 psi minimum compressive strength with 145 pcf ± 3 pcf unit weight). Reinforce the concrete in each web cavity with a minimum No. 4 deformed reinforcing bar installed vertically and centered in the cavity, and secured to the column web with a minimum No. 2 horizontal deformed reinforcing bar welded to the web every 18" on center vertically. As an alternate to the No. 4 rebar, 3/4" diameter by 3" long headed studs, spaced at 12" on center vertically, shall be welded on each side of the web midway between the column flanges.	-	-	-	See Footnote n

n. No additional insulating material is required on the exposed outside face of the column flange to achieve a one hour fire-resistance rating.

NOTE: PORTIONS OF THE TABLE NOT SHOWN REMAIN UNCHANGED.

TABLE 720.1(2)
RATED FIRE-RESISTANCE PERIODS FOR VARIOUS WALLS AND PARTITIONS [a,o,p]

MATERIAL	ITEM NUMBER	CONSTRUCTION	MINIMUM FINISHED THICKNESS FACE-TO-FACE (inches)			
			4 hour	3 hour	2 hour	1 hour
15. Exterior or interior walls (continued)	15-1.15[q]	2" x 4" wood studs at 16" with double top plates, single bottom plate; interior sides covered with 5/8" Type X gypsum wallboard, 4' wide, applied horizontally unblocked, and fastened with 2 1/4" Type S drywall screws, spaced 12" on center, wallboard joints covered with paper tape and joint compound, fastener heads covered with joint compound. Exterior covered with 3/8" wood structural panels ~~(oriented strand board)~~, applied vertically, horizontal joints blocked and fastened with 6d common nails (bright)– 12" on center in the field, 6" on center panel edges. Cavity to be filled with 3 ½" mineral wool insulation. Rating established for exposure from interior side only.	-	-		4 ½
	15-1.16[q]	2" x 6" (51 mm x 152 mm) wood studs at 16" centers with double top plates, single bottom plate; interior side covered with 5/8" Type X gypsum wallboard, 4' wide, applied horizontally or vertically with vertical joints over studs and fastened with 2 1/4" Type S drywall screws, spaced 12" on center, exterior side covered with 7/16" wallboard joints covered with paper tape and joint compound, fastener heads covered with joint compound; wood structural panels ~~(oriented strand board)~~ fastened with 6d common nails (bright) spaced 12" on center in the field and 6" on center along the panel edges. Cavity to be filled with 5½ " mineral wool insulation. Rating established from the gypsum-covered side only.	-	-	-	6 9/16
16. Exterior walls rated for fire resistance from the inside only in accordance with Section 704.5.	16-1.1[q]	2" x 4" wood studs at 16" centers with double top plates, single bottom plate; interior side covered with 5/8" Type X gypsum wallboard, 4' wide, applied horizontally unblocked, and fastened with 2 1/4" type S drywall screws, spaced 12" on center, wallboard joints covered with paper tape and joint compound, fastener heads covered with joint compound. Exterior covered with 3/8" wood structural panels ~~(oriented strand board)~~, applied vertically, horizontal joints blocked and fastened with 6d common nails (bright) - 12" on center in the field, and 6" on center panel edges. Cavity to be filled with 3 ½" mineral wool insulation. Rating established for exposure from interior side only.	-	-		4 ½

NOTE: PORTIONS OF THE TABLE NOT SHOWN REMAIN UNCHANGED.

TABLE 720.1(3)
MINIMUM PROTECTION FOR FLOOR AND ROOF SYSTEMS [a, q]

FLOOR OR ROOF CONSTRUCTION
22. ~~Steel joists~~, Wood joists, wood I-joists, floor trusses and flat or pitched roof trusses spaced a maximum 24" o.c. with ½" wood structural panels with exterior glue applied at right angles to top of joist or top chord of trusses with ~~8d screws~~ 8d nails. The wood structural panel thickness shall not be less than nominal ½" ~~nor~~ less than required by Chapter 23.

Note: Portions of the table not shown remain unchanged.

TABLE 720.1(3)
MINIMUM PROTECTION FOR FLOOR AND ROOF SYSTEMS [a, q]

FLOOR OR ROOF CONSTRUCTION	ITEM NUMBER	CEILING CONSTRUCTION	THICKNESS OF FLOOR OR ROOF SLAB (inches)				MINIMUM THICKNESS OF CEILING (inches)			
			4 HR	3 HR	2 HR	1 HR	4 HR	3 HR	2 HR	1 HR
24. Wood I-joist (minimum I-joist depth 9-1/4" with a minimum flange depth of 1-1/2" and a minimum flange cross-sectional area of 5.25 square inches; minimum web thickness of 3/8") @ 24" o.c., 1-1/2" mineral fiber insulation (2.5 pcf- nominal) resting on hat-shaped channels.	24.	Minimum 0.026 inch thick hat-shaped channel 16 inches o.c. (channels doubled at wallboard end joints), placed perpendicular to the joist and attached to each joist by 1-5/8 inch Type S drywall screws. 5/8 inch Type C gypsum wallboard applied perpendicular to the channel with end joints staggered and fastened with 1-1/8 inch Type S drywall screws spaced 12 inches o.c. in the field and 8 inches o.c. at the wallboard ends. Wallboard joints to be taped and covered with joint compound.	-	-	-	varies	-	-	-	varies
25. Wood I-joist (minimum joist depth 9 ¼"); or parallel wood chord trusses (minimum depth 18 inches); or nominal 2-by-10 wood joists spaced a maximum 24 inches on center, each supporting tongue-and-groove wood structural panels (nominal minimum 3/4-inch thick) applied perpendicular to framing members. Structural panels attached with 8d nails. Nails spaced 6 inches on center at panel edges and ends and 12 inches on center in field.	25-1.1	Base layer 5/8" type X gypsum board applied perpendicular to bottom of framing members with 1 1/4 –inch Type W screws spaced 12 inches o.c. Second layer 5/8" inch type X gypsum board attached perpendicular to framing members with 2-inch Type S screws spaced 12 inches o.c. Second layer joints offset 24 inches from base layer. Third layer 5/8" type X gypsum board attached perpendicular to framing members with 2 ½-inch Type S screws spaced 12 inches o.c. Third layer joints offset 12 inches from second layer joints. Hat-shaped rigid furring channels applied at right angles to framing members over third layer with two 2 ½-inch Type W screws at each framing member. Face layer 5/8" type X gypsum board applied at right angles to furring channels with 1 1/8-inch Type S screws spaced 12 inches o.c.	-	-	varies	-	-	-	3-3/8	-

26.Wood I joists (minimum I-joist depth 9-1/4" with a minimum flange depth of 1-1/2" and a minimum flange cross-sectional area of 5.25 square inches; minimum web thickness of 7/16") @ 24" o.c., 1-1/2" mineral fiber insulation (2.5 pcf-nominal) resting on resilient channels.	26.	Minimum 0.019 inch thick resilient channel 16 inches o.c. (channels doubled at wallboard end joints), placed perpendicular to the joist and attached to each joist by 1-5/8 inch Type S drywall screws. 5/8 inch Type C gypsum wallboard applied perpendicular to the channel with end joints staggered and fastened with 1 inch Type S drywall screws spaced 12 inches o.c. in the field and 8 inches o.c. at the wallboard ends. Wallboard joints to be taped and covered with joint compound.	-	-	-	varies	-	-	-	varies
27. Channel-shaped 18 gauge steel joists (minimum depth 8 inches) spaced a maximum 24" o.c. supporting tongue- and-groove wood structural panels (nominal minimum 3/4-inch thick) applied perpendicular to framing members. Structural panels attached with 1 5/8-inch Type S-12 screws spaced 12 inches on center.	27	Base layer 5/8" type X gypsum board applied perpendicular to bottom of framing members with 1 1/8 –inch Type S-12 screws spaced 12 inches o.c. Second layer 5/8" inch type X gypsum board attached perpendicular to framing members with 1 5/8-inch Type S-12 screws spaced 12 inches o.c. Second layer joints offset 24 inches from base layer. Third layer 5/8" type X gypsum board attached perpendicular to framing members with 2 3/8-inch Type S-12 screws spaced 12 inches o.c. Third layer joints offset 12 inches from second layer joints. Hat-shaped rigid furring channels applied at right angles to framing members over third layer with two 2 3/8-inch Type S-12 screws at each framing member. Face layer 5/8" type X gypsum board applied at right angles to furring channels with 1 1/8- inch Type S screws spaced 12 inches o.c.	-	-	varies	-	-	-	3-3/8	-

27. Wood I-joist (minimum I-joist depth 9-1/4" with a minimum flange thickness of 1-1/2" and a minimum flange cross-sectional area of 2.25 square inches; minimum web thickness of 3/8") @ 24" o.c	27-1.1	Two layers of 1/2 inch Type X gypsum wallboard applied with the long dimension perpendicular to the I-joists with end joints staggered. The base layer is fastened with 1-5/8 inch Type S drywall screws spaced 12 inches o.c. and the face layer is fastened with 2 inch Type S drywall screws spaced 12 in. o.c. in the field and 8 in. o.c. on the edges. Face layer end joints shall not occur on the same I-joist as base layer end joints and edge joints shall be offset 24 inches from base layer joints. Face layer to also be attached to base layer with 1- ½ inch Type G drywall screws spaced 8 in. o.c. placed 6 in. from face layer end joints. Face layer wallboard joints to be taped and covered with joint compound.	-	-	-	varies	-	-	-	varies
28. Wood I-joist (minimum I-joist depth 9-1/2" with a minimum flange depth of 1-5/16" and a minimum flange cross sectional area of 1.95 square inches; minimum web thickness of 3/8") @ 24" o.c.	28.-1.1	Minimum 0.019 inch thick resilientchannel 16 inches o.c.(channelsdoubled at wallboard end joints), placed perpendicular to the joist and attached to each joist by 1-5/8 inch Type S drywall screws. Two layers of 1/2 inch Type X gypsum wallboard applied with the long dimension perpendicular to the I- joists with end joints staggered. The base layer is fastened with 1-1/4 inch Type S drywall screws spaced 12 inches o.c. and the face layer is fastened with 1- 5/8 inch Type S drywall screws spaced 12 in. o.c. Face layer end joints shall not occur on the same I-joist as base layer end joints and edge joints shall be offset 24 inches from base layer joints. Face layer to also be attached to base layer with 1- 1/2 inch Type G drywall screws spaced 8 in. o.c. placed 6 in. from face layer end joints. Face layer wallboard joints to be taped and covered with joint compound.	-	-	-	varies	-	-	-	varies

29. Wood I-joist (minimum I-joist depth 9-1/4" with a minimum flange depth of 1-1/2" and a minimum flange cross-sectional area of 2.25 square inches; minimum web thickness of 3/8") @ 24" o.c., with hat-shaped channels supporting the middle and face layers of gypsum wallboard. Unfaced fiberglass insulation is installed between the I- joists supported on the upper surface of the flange by stay wires spaced 12 in. o.c.	29.-1.1	Base layer of 5/8 inch Type C gypsum wallboard attached directly to I-joists with 1-5/8 Type S drywall screws spaced 12 inches o.c. with ends staggered. Minimum 0.0179 inch thick resilient channel 16 inches o.c. (channels doubled at wallboard end joints), placed perpendicular to the joist and attached to each joist by 1- 5/8 inch Type S drywall screws after the base layer of gypsum wall board has been applied. The middle and face layers of 5/8 inch Type C gypsum wallboard applied perpendicular to the channel with end joints staggered. The middle layer is fastened with 1 inch Type S drywall screws spaced 12 inches o.c.. The face layer is applied parallel to the middle layer but with the edge joints offset 24 inches from those of the middle layer and fastened with 1-5/8 inch Type S drywall screws 8 in. o.c. The joints shall be taped and covered with joint compound.	-	-	-	varies	-	-	-	varies

721.5.1.3 Spray-applied fire-resistant materials. The fire resistance of wide-flange structural steel columns protected with spray-applied fire-resistant materials, as illustrated in Figure 721.5.1(5), shall be permitted to be determined from the following expression:

$R = [\, C_1 \, (W/D) + C_2 \,]\, h$ (Equation 7-13)

where:

R	=	Fire resistance (minutes).
h	=	Thickness of spray-applied fire-resistant material (inches).
D	=	Heated perimeter of the structural steel column (inches).
C_1 and C_2	=	Material-dependent constants.
W	=	Weight of structural steel columns (pounds per linear foot).

The fire resistance of structural steel columns protected with intumescent or mastic fire-resistant coatings shall be determined on the basis of fire-resistance tests in accordance with Section 703.2.

721.5.2.2 Spray-applied fire-resistant materials. The provisions in this section apply to ~~unrestrained~~ structural steel beams and girders protected with spray-applied fire-resistance-rated materials. Larger or smaller ~~unrestrained~~ beam and girder shapes shall be permitted to be substituted for beams specified in approved unrestrained or restrained fire-resistant assemblies provided that the thickness of the fire-resistant material is adjusted in accordance with the following expression:

$$h_2 = \left[\frac{(W_1 / D_1) + 0.60}{(W_2 / D_2) + 0.60} \right] h_1 \qquad \text{(Equation 7-17)}$$

where:

h = Thickness of spray-applied fire-resistant material in inches.

W = Weight of the structural steel beam or girder in pounds per linear foot.

D = Heated perimeter of the structural steel beam or girder in inches.

Subscript 1 refers to the beam and fire-resistant material thickness in the approved assembly.

Subscript 2 refers to the substitute beam or girder and the required thickness of fire-resistant material.

The fire resistance of structural steel beams and girders protected with intumescent or mastic fire-resistant coatings shall be determined on the basis of fire-resistance tests in accordance with Section 703.2.

721.5.2.2.1 Minimum thickness. The use of Equation 7-17 is ~~limited to beams with a weight-to-heated perimeter ratio (*W/D*) of 0.37 or greater. The minimum thickness of fire-resistant material shall not be less than 3/8 inch (9.5 mm)~~ subject to the following conditions.

1. The weight-to-heated perimeter ratio for the substitute beam or girder (W_2/D_2) shall not be less than 0.37.

2. The thickness of fire protection materials calculated for the substitute beam or girder (T_1) shall not be less than 3/8 inch (9.5 mm).

3. The unrestrained or restrained beam rating shall not be less than 1 hour.

4. When used to adjust the material thickness for a restrained beam, the use of this procedure is limited to steel sections classified as compact in accordance with the AISC Specification for Structural Steel Buildings, (AISC-LRFD).

721.5.2.3 Structural steel trusses. The fire resistance of structural steel trusses protected with fire- resistant materials spray-applied to each of the individual truss elements shall be permitted to be determined in accordance with this section. The thickness of the fire-resistant material shall be determined in accordance with Section 721.5.1.3. The weight-to-heated-perimeter ratio (*W/D*) of truss elements that can be simultaneously exposed to fire on all sides shall be determined on the same basis as columns, as specified in Section 721.5.1.1. The weight-to-heated-perimeter ratio (*W/D*) of truss elements that directly support floor or roof construction shall be determined on the same basis as beams and girders, as specified in Section 721.5.2.1.

The fire resistance of structural steel trusses protected with intumescent or mastic fire-resistant coatings shall be determined on the basis of fire-resistance tests in accordance with Section 703.2.

~~**721.7 Other reference documents.** Refer to Section 703.3, Item 1, and NBS BMS 71 and NBSTRBM-44 for fire-resistance ratings of materials and assemblies.~~

CHAPTER 8
INTERIOR FINISHES

801.1 Scope. Provisions of this chapter shall govern the use of materials used as interior finishes~~, trim and decorative materials~~.

[F] 801.1.2 — DELETE IN ITS ENTIRETY.
801.1.3 — DELETE IN ITS ENTIRETY.

801.2.1 Windows. Show windows in the ~~first story of buildings~~ exterior walls of the first story above grade plane shall be permitted to be of wood or of unprotected metal framing.
801.2.2 Foam plastics. Foam plastics shall not be used as interior finish or trim except as provided in Section ~~2603.8~~ 2603.4 or 2604. This section shall apply both to exposed foam plastics and to foam plastics used in conjunction with a textile or vinyl facing or cover.

***802.1 General.** The following words and terms shall, for the purposes of this chapter and as used elsewhere in this code, have the meanings shown herein.

~~**FLAME RESISTANCE.** That property of materials or combinations of component materials that restricts the spread of flame in accordance with NFPA 701.~~

FLAME SPREAD INDEX. ~~The numerical value assigned to a material tested in accordance with ASTM E 84.~~ A comparative measure, expressed as a dimensionless number, derived from visual measurements of the spread of flame versus time for a material tested in accordance with ASTM E 84.

INTERIOR WALL AND CEILING FINISH. The exposed interior surfaces of buildings including, but not limited to: fixed or movable walls and partitions; toilet room privacy partitions; columns; ceilings; and interior wainscotting, paneling or other finish applied structurally or for decoration, acoustical correction, surface insulation, structural fire resistance or similar purposes, but not including trim.

SMOKE-DEVELOPED INDEX. A comparative measure, expressed as a dimensionless number, derived from measurements of smoke obscuration versus time for a material tested in accordance with ASTM E 84.~~The numerical value assigned to a material tested in accordance with ASTM E 84.~~

TRIM. Picture molds, chair rails, baseboards, handrails, millwork, doors, door and window frames and similar decorative or protective materials used in fixed applications.

WALL BASE. Interior floor finish trim used to provide a functional as well as a decorative border at the intersection of walls and floors.

***NOTE: ALL OTHER PORTIONS OF THIS SECTION 802.1 TO REMAIN AS SET FORTH IN THE 2003 INTERNATIONAL BUILDING CODE.**

803.2.1 Acceptance criteria. During the 40 kW exposure, the interior finish shall comply with Item 1. During the 160 kW exposure, the interior finish shall comply with Item 2. During the entire test, the interior finish shall comply with Items 3 and 4.

1. During the 40kW exposure, flames shall not spread to the ceiling.
2. During the 160 kW exposure, the interior finish shall comply with the following:
   2.1. Flame shall not spread to the outer extremity of the sample on any wall or ceiling.
   2.2. Flashover, as defined in NFPA 286, shall not occur.
3. The peak rate of heat release throughout the NFPA 286 test shall not exceed 800 kW.
4. The total smoke released throughout the NFPA 286 test shall not exceed 1,000 m^2.

TABLE 803.5
INTERIOR WALL AND CEILING FINISH REQUIREMENTS BY OCCUPANCY[k]

GROUP	SPRINKLERED[l]			NONSPRINKLERED		
	~~Vertical exits~~ Exit enclosures and exit passageways [a, b]	~~Exit access~~ Corridors ~~and other exitways~~	Rooms and enclosed spaces[c]	~~Vertical exits~~ Exit enclosures and exit passageways [a, b]	~~Exit access~~ Corridors ~~and other exitways~~	Rooms and enclosed spaces[c]

a. Class C interior finish materials shall be permitted for wainscotting or paneling of not more than 1,000 square feet of applied surface area in the grade plane lobby where applied directly to a noncombustible base or over furring strips applied to a noncombustible base and fireblocked as required by Section 803.4.1.
b. In ~~vertical exits~~ exit enclosures of buildings less than three stories in height of other than Group I-3, Class B interior finish for nonsprinklered buildings and Class C interior finish for sprinklered buildings shall be permitted.
c. Requirements for rooms and enclosed spaces shall be based upon spaces enclosed by partitions. Where a fire-resistance rating is required for structural elements, the enclosing partitions shall extend from the floor to the ceiling. Partitions that do not comply with this shall be considered enclosing spaces and the rooms or spaces on both sides shall be considered one. In determining the applicable requirements for rooms and enclosed spaces, the specific occupancy thereof shall be the governing factor regardless of the group classification of the building or structure.
d. Lobby areas in Group A-1, A-2 and A-3 occupancies shall not be less than Class B materials.
e. Class C interior finish materials shall be permitted in places of assembly with an occupant load of 300 persons or less.
f. For ~~churches and places of worship~~ religious worship places, wood used for ornamental purposes, trusses, paneling or chancel furnishing shall be permitted.
g. Class B material required where the building exceeds two stories.
h. Class C interior finish materials shall be permitted in administrative spaces.
i. Class C interior finish materials shall be permitted in rooms with a capacity of four persons or less.
j. Class B materials shall be permitted as wainscotting extending not more than 48 inches above the finished floor in ~~exit access~~ corridors.
k. Finish materials as provided for in other sections of this code.
l. Applies when the ~~vertical exits~~ exit enclosures, exit passageways, ~~exit access~~ corridors ~~or exitways~~, or rooms and spaces are protected by a sprinkler system installed in accordance with Section 903.3.1.1 or 903.3.1.2.

803.6 Textiles. Where used as interior wall or ceiling finish materials, textiles, including materials having woven or nonwoven, napped, tufted, looped or similar surface and carpet and similar textile materials, shall comply with the requirements of ~~this~~ Section 803.6.1 and 803.6.2.

803.6.1 ~~Textile wall coverings~~ ASTM E 84. Textile wall and ceiling coverings shall have a Class A flame spread index in accordance with ASTM E 84 and be protected by automatic sprinklers installed in accordance with Section 903.3.1.1 or 903.3.1.2. ~~or the covering shall meet the criteria of Section 803.6.1.1 or 803.6.1.2 when tested in the manner intended for use in accordance with NFPA 265 using the product mounting system, including adhesive.~~

803.6.1.1 — DELETE IN ITS ENTIRETY.
803.6.1.2 — DELETE IN ITS ENTIRETY.

803.6.2 ~~Textile ceiling finish.~~ ~~Where used as a ceiling finish, carpet and similar textile materials shall have a Class A flame spread index in accordance with ASTM E 84 and be protected by automatic sprinklers.~~ **NFPA 265.** Textile wall coverings shall meet the criteria of Section 803.6.2.1 when tested in the manner intended for use in accordance with the Method B protocol of NFPA 265 using the product mounting system, including adhesive.

803.6.2.1 Method B test protocol. During the 40 kW exposure the interior finish shall comply with item 1. During the 150 kW exposure, the interior finish shall comply with item 2. During the entire test, the interior shall comply with item 3.

1. During the 40 kW exposure, flames shall not spread to the ceiling.
2. During the 150 kW exposure, the interior finish shall comply with the following:

2.1 Flame shall not spread to the outer extremities of the samples on the 8-foot by12-foot (203 mm by 305 mm) walls.

2.2 Flashover, as described in NFPA 265, shall not occur.

803.6.3 NFPA 286. Textile wall and ceiling coverings shall meet the criteria of Section 803.2.1 when tested in the manner intended for use in accordance with NFPA 286 using the product mounting system, including adhesive.

804.1 General. Interior floor finish and floor covering materials shall comply with this section.

~~**Exception:** Floors and floor coverings of a traditional type, such as wood, vinyl, linoleum or terrazzo, and resilient floor covering materials which are not comprised of fibers.~~

804.2 ~~Classification.~~ ~~Interior floor finish and floor covering materials required by Section 804.5.1 to be of Class I or II materials shall be classified in accordance with NFPA 253. The classification referred to herein corresponds to the classifications determined by NFPA 253 as follows: Class I, 0.45 watts/cm^2 or greater; Class II, 0.22 watts/cm^2 or greater.~~

~~**804.3 Testing and identification.** Floor covering materials shall be tested by an approved agency in accordance with NFPA253 and identified by a hang tag or other suitable method so as to identify the manufacturer or supplier and style, and shall indicate the interior floor finish or floor covering classification according to Section 804.2. Carpet-type floor coverings shall be tested as proposed for use, including underlayment. Test reports confirming the information provided in the manufacturer's product identification shall be furnished to the building official upon request.~~

~~**804.4**~~ **Application.** Combustible materials installed in or on floors of buildings of Type I or II construction shall conform with the requirements of this section.

Exception: Stages and platforms constructed in accordance with Sections 410.3 and 410.4, respectively.

~~**804.4.1**~~ **804.2.1 Subfloor construction.** Floor sleepers, bucks and nailing blocks shall not be constructed of combustible materials, unless the space between the fire-resistance-rated floor construction and the flooring is either solidly filled with approved noncombustible materials or fireblocked in accordance with Section 717, and provided that such open spaces shall not extend under or through permanent partitions or walls.

~~**804.4.2**~~ **804.2.2 Wood finish flooring.** Wood finish flooring is permitted to be attached directly to the embedded or fireblocked wood sleepers and shall be permitted where cemented directly to the top surface of approved fire-resistance-rated floor construction or directly to a wood subfloor attached to sleepers as provided for in Section ~~804.4.1~~ 804.2.1.

~~**804.4.3**~~ **804.2.3 Insulating boards.** Combustible insulating boards not more than 0.5-inch (12.7 mm) thick and covered with approved ~~finished~~ finish flooring are permitted, where attached directly to a noncombustible floor assembly or to wood subflooring attached to sleepers as provided for in Section ~~804.4.1~~ 804.2.1.

804.5 — DELETE IN ITS ENTIRETY.

804.5.1 — DELETE IN ITS ENTIRETY.

[F] SECTION 805

DELETE IN ITS ENTIRETY.

CHAPTER 9
FIRE PROTECTION SYSTEMS

901.4 Threads. Threads provided for fire department connections to sprinkler systems, standpipes, yard hydrants or any other fire hose connection shall be ~~compatible with the connections used by the local fire department~~ National Standard hose threads.

901.5 Acceptance tests. Fire protection systems shall be tested in accordance with the requirements of this code and the ~~*International*~~ *Fire Code*. When required, the tests shall be conducted in the presence of the building official. Tests required by this code, the ~~*International*~~ *Fire Code* and the standards listed in this code shall be conducted at the expense of the owner or the owner's representative. It shall be unlawful to occupy portions of a structure until the required fire protection systems within that portion of the structure have been tested and approved.

The location of all fire department hose connections shall be approved by the fire marshal.

Inspection of fire-extinguishing systems shall be conducted by the fire marshal, and such inspection and reports shall be forwarded to the building official for posting to occupancy records. No building or structure requiring a fire-extinguishing system shall be permanently occupied without first obtaining the fire marshal's approval.

Exception: The building official shall have the authority to issue a temporary certificate of occupancy for the use of a portion or portions of a building prior to the completion of the entire structure.

901.8 Fire pumps. Fire pumps shall be listed by Factory Mutual, Underwriters Laboratories or another approved agency. Such pumps shall be automatic operation. See the Electrical Code for additional requirements. When such pumps are not approved for direct connection to the city main, the source of supply for such pumps shall be a minimum 2500-gallon suction tank served from the city main.

901.9 Outside sprinkler control valve. Outside control in the form of a wall post indicator valve or post indicator valve shall be provided for each sprinkler system. An indicating-type gate valve shall be required when sprinkler systems are supplied by the standpipe system.

901.10 Two-way standpipe connections. Class I and Class III standpipe systems shall be equipped with a two-way fire department inlet connection. Systems with three or more standpipes shall be provided with not less than two two-way fire department inlet connections.

***902.1 Definitions.** The following words and terms shall, for the purposes of this chapter, and as used elsewhere in this code, have the meanings shown herein.

HFD **[F] STANDPIPE, TYPE~~S~~ OF.** ~~Standpipe types are as follows:~~

~~**Automatic dry.** A dry standpipe system, normally filled with pressurized air, that is arranged through the use of a device, such as dry pipe valve, to admit water into the system piping automatically upon the opening of a hose valve. The water supply for an automatic dry standpipe system shall be capable of supplying the system demand.~~

Automatic wet. A wet standpipe system that has a water supply that is capable of supplying the system demand automatically.

~~**Manual dry.** A dry standpipe system that does not have a permanent water supply attached to the system. Manual dry standpipe systems require water from a fire department pumper to be pumped into the system through the fire department connection in order to meet the system demand.~~

~~**Manual wet.** A wet standpipe system connected to a water supply for the purpose of maintaining water within the system but does not have a water supply capable of delivering the system demand attached to the system. Manual-wet standpipe systems require water from a fire department pumper (or the like) to be pumped into the system in order to meet the system demand.~~

~~**Semiautomatic dry.** A dry standpipe system that is arranged through the use of a device, such as a deluge valve, to admit water into the system piping upon activation of a remote control device located at a hose connection. A remote control activation device shall be provided at each hose connection. The water supply for a semiautomatic dry standpipe system shall be capable of supplying the system demand.~~

OPEN BUILDING. A building having each wall at least 80 percent open.

***NOTE: ALL OTHER PORTIONS OF THIS SECTION 902.1 TO REMAIN AS SET FORTH IN THE 2003 INTERNATIONAL BUILDING CODE.**

[F] 903.2 Where required. Approved automatic sprinkler systems in new buildings and structures shall be provided in the locations described in this section.

Exceptions:

1. Spaces or areas in telecommunications buildings used exclusively for telecommunications equipment, associated electrical power distribution equipment, batteries and standby engines, provided those spaces or areas are equipped throughout with an automatic fire alarm system and are separated from the remainder of the building by ~~a wall with a fire-resistance rating of not less~~ fire barriers consisting of not less than 1-hour fire-resistance-rated walls and ~~a~~ 2-hour fire-resistance-rated floor/ceiling ~~assembly with a fire-resistance rating of not less than 2 hours~~ assemblies.
2. In other than Group H occupancies, a sprinkler system shall not be required in open buildings.

[F] 903.2.1.2 Group A-2. An automatic sprinkler system shall be provided for Group A-2 occupancies where one of the following conditions exists:

1. The fire area exceeds 5,000 square feet (464.5m^2).
2. The fire area has an occupant load of 300 or more.
3. The fire area is located on a floor other than the level of exit discharge.
4. The fire area has an occupant load of 100 or more where alcoholic beverages are consumed.

903.2.1.3 Group A-3. An automatic sprinkler system shall be provided for Group A-3 occupancies where one of the following conditions exists:

1. The fire area exceeds 12,000 square feet (1115 m²).
2. The fire area has an occupant load of 300 or more.
3. The fire area is located on a floor other than the level of exit discharge.

Exceptions:

1. Areas used exclusively as participant sports areas where the main floor area is located at the same level as the level of exit discharge of the main entrance and exit.
2. In lieu of a sprinkler system for a temporary use occupancy, the applicant may agree to provide a fire watch program under which one or more fire fighters of this jurisdiction will be present on the premises at all times when the amusement occupancy is open for use. The fire marshal shall promulgate regulations regarding the qualifications, deployment and numbers of fire fighters, which regulations shall be predicated upon public safety for the purpose of preventing fires and allowing safe egress in the event of a fire. The jurisdiction shall not be obligated to provide fire

fighters for this purpose. See the Fire Code for applicable fees and service conditions.

[F] 903.2.3 Group F-1. An automatic sprinkler system shall be provided throughout ~~all buildings~~ floor areas containing a Group F-1 occupancy where one of the following conditions exists:

1. Where a Group F-1 fire area exceeds 12,000 square feet (1115 m^2);
2. Where a Group F-1 fire area is located more than three stories above grade plane; or
3. Where the combined area of all Group F-1 fire areas on all floors, including any mezzanines, exceeds 24,000 square feet (2230 m^2).

Where the Group F-1 occupancy is located above the level of exit discharge, the sprinklers shall be provided in all floors between the Group F-1 occupancy and the level of exit discharge.

[F] 903.2.6 Group M. An automatic sprinkler system shall be provided throughout ~~buildings~~ floor areas containing a Group M occupancy where one of the following conditions exists:

1. Where a Group M fire area exceeds 12,000 square feet (1115 m^2);
2. Where a Group M fire area is located more than three stories above grade plane; or
3. Where the combined area of all Group M fire areas on all floors, including any mezzanines, exceeds 24,000 square feet (2230 m^2).

Where the Group M occupancy is located above the level of exit discharge, the sprinklers shall be provided in all floors between the Group M occupancy and the level of exit discharge.

[F] 903.2.7 Group R. An automatic sprinkler system installed in accordance with Section 903.3 shall be provided throughout all ~~buildings~~ floor areas with a Group R fire area.

Exception: Group R-3 occupancies, unless otherwise required by this code.

Where the Group R occupancy is located above the level of exit discharge, the sprinklers shall be provided in all floors between the Group R occupancy and the level of exit discharge.

[F] 903.2.8 Group S-1. An automatic sprinkler system shall be provided throughout all ~~buildings~~ floor areas containing a Group S-1 occupancy where one of the following conditions exists:

1. A Group S-1 fire area exceeds 12,000 square feet (1115 m^2);
2. A Group S-1 fire area is located more than three stories above grade plane; or
3. The combined area of all Group S-1 fire areas on all floors, including any mezzanines, exceeds 24,000 square feet (2230 m^2).

Where the Group S-1 occupancy is located above the level of exit discharge, the sprinklers shall be provided in all floors between the Group S-1 occupancy and the level of exit discharge.

903.2.11 Reserved. ~~**During construction.** Automatic sprinkler systems required during construction, alteration and demolition operations shall be provided in accordance with the *International Fire Code*.~~

[F] 903.3.1 Standards. Sprinkler systems shall be designed and installed in accordance with Section 903.3.1.1, 903.3.1.2 or 903.3.1.3. Where listed for such use, fire sprinklers that have been tested and/or approved by a nationally recognized testing laboratory shall be accepted as equivalent.

[F] 903.3.1.1.1 Exempt locations. Automatic sprinklers shall not be required in the following rooms or areas where such rooms or areas are protected with an approved automatic fire detection system in accordance with Section 907.2 that will respond to visible or invisible particles of combustion. Sprinklers shall not be omitted from any room merely because it is damp, of fire-resistance-rated construction or contains electrical equipment.

1. Any room where the application of water, or flame and water, constitutes a serious life or fire hazard.
2. Any room or space where sprinklers are considered undesirable because of the nature of the contents, when approved by the building official.

3. Generator and transformer rooms separated from the remainder of the building by walls and floor/ceiling or roof/ceiling assemblies having a fire-resistance rating of not less than 2 hours.
4. In rooms or areas that are of noncombustible construction with wholly noncombustible contents.
5. Elevator machine rooms where all of the following apply:
   5.1 The elevator machine room is separated from the remainder of the building by a fire barrier at least equal to that required for the hoistway enclosure with a minimum of one hour.
   5.2 The machine room shall be used exclusively for machines and equipment required for the operation of the elevator.
   5.3 Smoke detectors are provided as required by the Elevator Safety Code.

903.3.7 Fire department connections. The location of fire department connections shall be approved by the ~~building official~~ fire marshal. Fire department connections shall be located on the street side of buildings, fully visible and recognizable from the street or nearest point of fire department vehicle access or as otherwise approved by the fire marshal.

903.4.1 Signals. Alarm, supervisory and trouble signals shall be distinctly different and automatically transmitted to an approved central station, remote supervising station or proprietary supervising station as defined in NFPA 72 or, when approved by the ~~building official~~ fire marshal, shall sound an audible signal at a constantly attended location.

Exceptions:

1. Underground key or hub valves in roadway boxes provided by the municipality or public utility are not required to be monitored.
2. Backflow prevention device test valves, located in limited area sprinkler system supply piping, shall be locked in the open position. In occupancies required to be equipped with a fire alarm system, the backflow preventer valves shall be electrically supervised by a tamper switch installed in accordance with NFPA 72 and separately annunciated.

[F] 904.11.1 Manual system operation. A manual actuation device shall be located at or near a means of egress from the cooking area, a minimum of 10 feet (3048 mm) and a maximum of 20 feet (6096 mm) from the kitchen exhaust system. ~~The manual actuation device shall be located a minimum of 4 feet (1219 mm) and a maximum of 5 feet (1524 mm) above the floor.~~ The manual actuation device shall be installed not more than 48 inches (1200 mm), nor less than 42 inches (1067 mm) above the floor and shall clearly identify the hazard protected. The manual actuation shall require a maximum force of 40 pounds (178 N) and a maximum movement of 14 inches (356 mm) to actuate the fire suppression system.

Exception: Automatic sprinkler systems shall not be required to be equipped with manual actuation means.

905.1.1 Fire pumps. Required standpipe system flow and pressure shall be sized based on not exceeding 100% of the pump rated capacity.

905.3.1 Building height. Class III standpipe systems shall be installed throughout buildings where the floor level of the highest story is located more than 30 feet (9144 mm) above ~~the lowest level of the fire department vehicle access~~ grade plane, or where the floor level of the lowest story is located more than 30 feet (9144 mm) below ~~the highest level of fire department vehicle access~~ grade plane.

Exceptions:

1. Class I standpipes are allowed in buildings equipped throughout with an automatic sprinkler system in accordance with Section 903.3.1.1 or Section 903.3.1.2.

~~2. Class I manual standpipes are allowed in open parking garages where the highest floor is located not more than 150 feet (45 720 mm) above the lowest level of fire department vehicle access.~~

~~3. Class I manual dry standpipes are allowed in open parking garages that are subject to freezing temperatures, provided that the hose connections are located as required for Class II standpipes in accordance with Section 905.5.~~

~~4.~~2. Class I standpipes are allowed in basements equipped throughout with an automatic sprinkler system.

905.3.2 Group A. Class I automatic wet standpipes shall be provided in nonsprinklered Group A buildings having an occupant load exceeding 1,000 persons.

Exceptions~~s~~:

~~1.~~ Open-air-seating spaces without enclosed spaces.

~~2. Class I automatic dry and semiautomatic dry standpipes or manual wet standpipes are allowed in buildings where the highest floor surface used for human occupancy is 75 feet (22 860 mm) or less above the lowest level of fire department vehicle access~~

[F] 905.3.3 Covered mall buildings. A covered mall building shall be equipped throughout with a standpipe system where required by Section 905.3.1. Covered mall buildings not required to be equipped with a standpipe system by Section 905.3.1 shall be equipped with Class I hose connections connected to a system sized to deliver 250 gallons per minute (946.4 L/min.) at the most hydraulically remote outlet. Hose connections shall be provided at each of the following locations:

1. Within the mall at the entrance to each exit passageway or corridor.
2. At each floor-level landing within enclosed stairways opening directly on the mall.
3. At exterior public entrances to the mall.

905.3.4 Stages. Stages greater than 1,000 square feet in area (93 m²) shall be equipped with a Class ~~III~~ II wet standpipe system with 1.5-inch (38 mm) ~~and 2.5 inch (38 mm and 64 mm~~) hose connections on each side of the stage.

Exception: Where the building or area is equipped throughout with an automatic sprinkler system, the hose connections are allowed to be supplied from the automatic sprinkler system~~ and shall have a flow rate of not less than that required by NFPA 14 for Class III standpipes~~.

905.3.5 Underground buildings. Underground buildings shall be equipped throughout with a Class I automatic wet ~~or manual wet~~ standpipe system.

905.3.7 Marinas and boatyards. Marinas and boatyards shall be equipped throughout with standpipe systems in accordance with NFPA 303.

[F] 905.4 Location of Class I standpipe hose connections. Class I standpipe hose connections shall be provided in all of the following locations:

1. In every required stairway, a hose connection shall be provided for each floor level above or below grade plane. Hose connections shall be located at ~~an intermediate~~ each floor level landing ~~between floors~~, unless otherwise approved by the~~ building official~~ fire marshal.
2. On each side of the wall adjacent to the exit opening of a horizontal exit.

Exception: Where floor areas adjacent to a horizontal exit are reachable from exit stairway hose connections by a 30-foot (9144 mm) hose stream from a nozzle

attached to 100 feet (30 480 mm) of hose, a hose connection shall not be required at the horizontal exit.

3. In every exit passageway at the entrance from the exit passageway to other areas of a building.
4. In covered mall buildings, adjacent to each exterior public entrance to the mall and adjacent to each entrance from an exit passageway or exit corridor to the mall.
5. Where the roof has a slope less than four units vertical in 12 units horizontal (33.3-percent slope), each standpipe shall be provided with a hose connection located either on the roof or at the highest landing of stairways with stair access to the roof. An additional hose connection shall be provided at the top of the most hydraulically remote standpipe for testing purposes.
6. Where the most remote portion of a nonsprinklered floor or story is more than 150 feet (45 720 mm) from a hose connection or the most remote portion of a sprinklered floor or story is more than 200 feet (60 960 mm) from a hose connection, the building official is authorized to require that additional hose connections be provided in approved locations.

905.5 Location of Class II standpipe hose connections. Class II standpipe hose connections shall be accessible and located so that all portions of the building are within 30 feet (9144 mm) of a variable nozzle attached to 100 feet (30 480 mm) of hose.

[F] 905.8 ~~**Dry standpipes.** Dry standpipes shall not be installed~~ **Design pressure.** Design pressure at the uppermost valve for a Class II standpipe system shall be 35 psi.

~~**Exception:** Where subject to freezing and in accordance with NFPA 14.~~

[F] 907.2 Where required. An approved manual, automatic or manual and automatic fire alarm system shall be provided in accordance with Sections 907.2.1 through 907.2.23. Where automatic sprinkler protection, installed in accordance with Section 903.3.1.1 or 903.3.1.2, is provided and connected to the building fire alarm system, automatic heat detection required by this section shall not be required. An approved automatic fire detection system shall be installed in accordance with the provisions of this code and NFPA72. Devices, combinations of devices, appliances and equipment shall comply with Section 907.1.2. The automatic fire detectors shall be smoke detectors, except that an approved alternative type of detector shall be installed in spaces such as boiler rooms where, during normal operation, products of combustion are present in sufficient quantity to actuate a smoke detector.

Exception: In other than Group H occupancies, a fire alarm system shall not be required in open buildings.

907.2.3 Group E. A manual and automatic fire alarm system shall be installed in Group E occupancies. ~~When automatic sprinkler systems or smoke detectors are installed, such systems or detectors shall be connected to the building fire alarm system~~.

Exceptions:

1. Group E occupancies with an occupant load of less than 50.
2. Manual fire alarm boxes are not required in Group E occupancies where the building is protected throughout by an approved supervised automatic sprinkler system and has a local alarm to notify all occupants. ~~all the following apply:~~
   - ~~2.1. Interior corridors are protected by smoke detectors with alarm verification.~~
   - ~~2.2. Auditoriums, cafeterias, gymnasiums and the like are protected by heat detectors or other approved detection devices.~~
   - ~~2.3. Shops and laboratories involving dusts or vapors are protected by heat detectors or other approved detection devices.~~
   - ~~2.4. Off-premises monitoring is provided.~~

~~2.5. The capability to activate the evacuation signal from a central point is provided.~~

~~2.6. In buildings where normally occupied spaces are provided with a two-way communication system between such spaces and a constantly attended receiving station from where a general evacuation alarm can be sounded, except in locations specifically designated by the building official.~~

907.2.3.1 Group E educational. Smoke detectors shall be installed in any interior corridor serving as an exit and in storerooms, mechanical rooms, janitorial rooms and similar areas. Smoke detectors shall not be required in toilet rooms, classrooms or offices.

Exception: Approved heat detectors may be installed in lieu of smoke detectors in mechanical rooms, janitorial rooms and similar areas.

907.2.3.2 Group E child care with an occupant load of 50 or more. Smoke detectors shall be installed in corridors, in common areas and in each room or area that exceeds 20 square feet in floor area.

907.2.3.3 Group E child care with an occupant load of less than 50. Smoke detectors shall be installed in each occupiable area. All such detectors shall be interconnected in such a way that the activation of any detector shall automatically activate the alarm of all detectors, unless provided with a fire alarm system in accordance with Section 907.2.3.

907.2.3.4 Manual fire alarm boxes. Where required in Group E occupancies, manual fire alarm boxes shall be located in accordance with Section 907.3.

[F] 907.2.6 Group I. A manual fire alarm system and an automatic fire detection system shall be installed in Group I occupancies. An electrically supervised, automatic smoke detection system shall be provided in ~~waiting areas that are open to corridors~~ accordance with Sections 907.2.6.1 and 907.2.6.2.

~~**Exception:** Manual fire alarm boxes in patient sleeping areas of Group I-1 and I-2 occupancies shall not be required at exits if located at all nurses' control stations or other constantly attended staff locations, provided such stations are visible and continuously accessible and that travel distances required in Section 907.3.1 are not exceeded.~~

~~**[F] 907.2.6.1 Group I-2.** Corridors in nursing homes (both intermediate-care and skilled nursing facilities), detoxification facilities and spaces open to the corridors shall be equipped with an automatic fire detection system.~~

~~**Exceptions:**~~

~~1. Corridor smoke detection is not required in smoke compartments that contain patient sleeping rooms where patient sleeping units are provided with smoke detectors that comply with UL 268. Such detectors shall provide a visual display on the corridor side of each patient sleeping unit and an audible and visual alarm at the nursing station attending each unit.~~

~~2. Corridor smoke detection is not required in smoke compartments that contain patient sleeping rooms where patient sleeping unit doors are equipped with automatic door- closing devices with integral smoke detectors on the unit sides installed in accordance with their listing, provided that the integral detectors perform the required alerting function.~~

907.2.6.1 Patient rooms. Patient sleeping units within Group I-1 and I-2 occupancies shall be provided with UL 268 type smoke detectors. Such detectors in Groups I-2 shall provide a visual display on the corridor side of each patient sleeping unit, and shall provide an audible and visual alarm at the nursing station attending each sleeping unit. In patient sleeping units equipped with automatic door closures having integral smoke

detectors on the room side, the integral detector may substitute for the room smoke detector, provided it performs the required functions.

907.2.6.2 Group I-1. Corridors, habitable spaces other than sleeping rooms and kitchens and waiting areas that are open to corridors shall be equipped with an automatic smoke detection system.

Exceptions:

1. Smoke detection in habitable spaces is not required where the facility is equipped throughout with an automatic sprinkler system.
2. Smoke detection is not required for exterior balconies.

[F] 907.2.6.~~2~~ 3 Group I-3. Group I-3 occupancies shall be equipped with a manual and automatic fire alarm system installed for alerting staff.

[F] 907.2.6.~~2~~ 3.1 System initiation. Actuation of an automatic fire-extinguishing system, a manual fire alarm box or a fire detector shall initiate an approved fire alarm signal which automatically notifies staff. Presignal systems shall not be used.

[F] 907.2.6.~~2~~ 3.2 Manual fire alarm boxes. Manual fire alarm boxes are not required to be located in accordance with Section 907.3 where the fire alarm boxes are provided at staff-attended locations having direct supervision over areas where manual fire alarm boxes have been omitted. Manual fire alarm boxes shall be permitted to be locked in areas occupied by detainees, provided that staff members are present within the subject area and have keys readily available to operate the manual fire alarm boxes.

907.2.6.~~2~~ 3.3 Smoke detectors. An approved automatic smoke detection system shall be installed throughout resident housing areas, including sleeping areas and contiguous day rooms, group activity spaces and other common spaces normally accessible to residents.

Exceptions:

~~1.~~ Other approved smoke-detection arrangements providing equivalent protection including, but not limited to, placing detectors in exhaust ducts from cells or behind protective guards listed for the purpose are allowed when necessary to prevent damage or tampering.

~~2. Sleeping units in Use Conditions 2 and 3.~~

~~3. Smoke detectors are not required in sleeping units with four or fewer occupants in smoke compartments that are equipped throughout with an approved automatic sprinkler system.~~

907.2.6.4 Group I-4. Group I-4 occupancies shall have a manual fire alarm and automatic fire detection system installed in accordance with 907.2.3.

[F] 907.2.9 Group R-2. A manual fire alarm system shall be installed in Group R-2 occupancies where:

1. Any dwelling unit or sleeping unit is located three or more stories above the lowest level of exit discharge;
2. Any dwelling unit or sleeping unit is located more than one story below the highest level of exit discharge of exits serving the dwelling unit or sleeping unit; or
3. The building contains more than 16 dwelling units or sleeping units.

Exceptions:

1. A fire alarm system is not required in buildings not over two stories in height where all dwelling units or sleeping units and contiguous attic and crawl spaces are separated from each other and public or common areas

by at least 1-hour fire partitions and each dwelling unit or sleeping unit has an exit directly to a public way, exit court or yard.

2. Manual fire alarm boxes are not required throughout the building when the following conditions are met:
   2.1. The building is equipped throughout with an automatic sprinkler system in accordance with Section 903.3.1.1 or 903.3.1.2.
   2.2. The notification appliances will activate upon sprinkler flow~~, and~~
   ~~2.3. At least one manual fire alarm box is installed at an approved location~~.
3. A fire alarm system is not required in buildings that do not have interior corridors serving dwelling units and are protected by an approved automatic sprinkler system installed in accordance with Section 903.3.1.1 or 903.3.1.2, provided that dwelling units either have a means of egress door opening directly to an exterior exit access that leads directly to the exits or are served by open-ended corridors designed in accordance with Section 1022.6, Exception 4 and which have a local alarm meeting the notification requirements in Section 907.9.2.

907.2.10.1.4 Group E child day care facilities. Unless a fire alarm system is provided meeting the requirements of Section 907.2.3, a smoke alarm shall be provided in each occupiable area of child day care facilities with an occupant load of less than 50. Where more than one smoke alarm is required, the smoke alarms shall be interconnected in such a manner that activation of one alarm shall activate all the alarms.

[F] 907.2.12 High-rise buildings. Buildings having floors used for human occupancy located more than 75 feet (22 860 mm) above ~~the lowest level of fire department vehicle access~~ grade plane shall be provided with an automatic fire alarm system and an emergency voice/alarm communication system in accordance with Section 907.2.12.2.

Exceptions:

1. Airport traffic control towers in accordance with Sections 412 and 907.2.22.
2. Open parking garages in accordance with Section 406.3.
3. Buildings with an occupancy in Group A-5.
4. Low-hazard special occupancies in accordance with Section 503.1.2.
5. Buildings with an occupancy in Group H-1, H-2 or H-3 in accordance with Section 415.

907.2.12.1 Automatic fire detection. Smoke detectors shall be provided in accordance with this section. Smoke detectors shall be connected to an automatic fire alarm system in accordance with NFPA 72-1996. The activation of any detector required by this section shall operate the emergency voice/alarm communication system and shall place into operation all stair pressurization and atria fans to restrict the recirculation of smoke. Activation of any detector or any flow detector shall initiate the designed function of smoke dampers, fans and other components of the smoke-control system, unless the smoke-control system is designed or required to be manually activated only.
Rate of rise detectors may be used in lieu of smoke detectors in parking garages.
Smoke detectors shall be located as follows:

1. In each mechanical equipment, electrical, transformer, telephone equipment, central control station, or similar room which is not provided with sprinkler protection, elevator machine rooms and in elevator lobbies.
2. ~~In the main return air and exhaust air plenum of each air-conditioning system having a capacity greater than 2,000 cubic feet per minute (cfm)~~

~~(0.94 m³/s). Such detectors shall be located in a serviceable area downstream of the last duct inlet~~. In either the return-air plenum or main supply air duct of every air-conditioning and mechanical ventilating system with fans having a rated capacity of 2200 cfm or greater. Activation of the products of combustion detector shall cut off electric current to the fan and shall operate the voice alarm signaling system of the required automatic fire alarm system.

Exception: If air movement provided by the air-conditioning system or mechanical ventilating system is a designed component of the smoke-control system, the smoke detector need not shut off electric current to the fan.

3. ~~At each connection to a vertical duct or riser serving two or more stories from a return-air duct or plenum of an air-conditioning system. In Group R-1 and R-2 occupancies a listed smoke detector is allowed to be used in each return-air riser carrying not more than 5,000 cfm (2.4 m³/s) and serving not more than 10 air-inlet openings.~~ At each connection to a duct or riser serving two or more stories from a return-air duct or plenum of an air-conditioning system having an air volume of 2200 cfm or greater.
4. In each exit corridor within 3 feet of each exit-access door to a stair. When exit corridors are not clearly defined, they shall be assumed to be 8 feet wide connecting exit stairways.
5. In commercial kitchens.

Exception: Rate of rise detectors may be installed in lieu of smoke detectors, with spacing every 500 square feet.

907.2.12.2 Emergency voice/alarm communication system. The operation of any automatic fire detector, sprinkler or water-flow device ~~or manual fire alarm box~~ shall automatically sound an alert tone followed by voice instructions giving ~~approved~~ appropriate information and directions on a general or selective basis to the following terminal areas on a minimum of the alarming floor, the floor above and the floor below in accordance with the ~~*International*~~ *Fire Code*. The voice instructions shall be approved by the Fire Marshal.

1. Elevator lobbies.
2. Corridors.
3. Rooms and tenant spaces exceeding 1,000 square feet (93 m²) in area.
4. Dwelling units or sleeping units in Group R-2 occupancies.
5. Sleeping units in Group R-1 occupancies.
6. Areas of refuge as defined in this code.
7. Elevators.
8. Exit stairways.

The alarm shall be designed to be heard clearly by all occupants within the building or designated portions thereof as is required for the public address system. The alarm shall sound on the floor of incidence, the floor above, and the floor below. A manual override for emergency voice communication shall be provided for all paging zones.

Exception: In Group I-1 and I-2 occupancies, the alarm shall sound in a constantly attended area and a general occupant notification shall be broadcast over the overhead page.

[F] 907.2.12.2.1 Manual override. A manual override for emergency voice communication shall be provided on a selective and all-call basis for all paging zones.

[F] 907.2.12.2.2 Live voice messages. The emergency voice/alarm communication system shall also have the capability to broadcast live voice messages through paging zones on a selective and all-call basis. ~~speakers located in elevators, exit stairways and throughout a selected floor or floors.~~

907.2.12.3 Fire department communication system. An approved two-way, fire department communication system designed and installed in accordance with NFPA 72 shall be provided for fire department use. It shall operate between a fire command center complying with Section 911 and elevators, elevator lobbies, emergency and standby power rooms, fire pump rooms, areas of refuge and inside enclosed exit stairways. The fire department communication device shall be provided at each floor level within the enclosed stairway.

~~**Exception:** Fire department radio systems where approved by the fire department.~~

[F] 908.3 ~~Highly toxic and toxic materials~~ Gas detection system. A gas detection system shall be provided for indoor storage and use of highly toxic and toxic gases to detect the presence of gas at or below the permissible exposure limit (PEL) or ceiling limit of the gas for which detection is provided. The system shall be capable of monitoring the discharge from the treatment system at or below one-half the IDLH limit.

Exception: A gas detection system is not required for toxic gases when the physiological warning ~~properties~~ threshold level for the gas ~~are~~ is at a level below the accepted PEL for the gas.

909.4.6 Duration of operation. All portions of active or passive smoke control systems shall be capable of continued operation after detection of the fire event for a period of not less than either 20 minutes or 1.5 times the calculated egress time, whichever is less.

909.5.2 Opening protection. Openings in smoke barriers shall be protected by automatic-closing devices actuated by the required controls for the mechanical smoke control system. Door openings shall be protected by door assemblies complying with Section ~~715.4.3~~ 715.3.3.

Exceptions:

1. Passive smoke control systems with automatic-closing devices actuated by spot- type smoke detectors listed for releasing service installed in accordance with Section ~~907.11~~ 907.10.
2. Fixed openings between smoke zones ~~which~~ that are protected utilizing the airflow method.
3. In Group I-2, where such doors are installed across corridors, a pair of opposite-swinging doors without a center mullion shall be installed having vision panels with ~~approved~~ fire-protection-rated glazing materials in ~~approved~~ fire-protection-rated frames, the area of which shall not exceed that tested. The doors shall be close fitting within operational tolerances and shall not have undercuts, louvers or grilles. The doors shall have head and jamb stops, astragals or rabbets at meeting edges, and shall be automatic-closing ~~devices~~ by smoke detection in accordance with Section 715.3.7.3. Positive-latching devices are not required.
4. Group I-3.
5. Openings between smoke zones with clear ceiling heights of 14 feet (4267 mm) or greater and bank-down capacity of greater than 20 minutes as determined by the design fire size.

909.8.1 Exhaust rate. The height of the lowest horizontal surface of the accumulating smoke layer shall be maintained at least ~~10~~ 6 feet (~~3048~~ 1829 mm) above any walking surface which forms a portion of a required egress system within the smoke zone. ~~The required exhaust rate for the zone shall be the largest of the calculated plume mass flow rates for the possible plume configurations. Provisions shall be made for natural or mechanical supply of air from outside or adjacent smoke zones to make up for the air exhausted. Makeup airflow rates, when measured at the potential fire location, shall not exceed 200 feet per minute (60 960 mm per minute) toward the~~

~~fire. The temperature of the makeup air shall be such that it does not expose temperature-sensitive fire protection systems beyond their limits.~~

909.8.2 DELETE AND RESERVE.

909.8.3 DELETE AND RESERVE.

909.8.4 DELETE AND RESERVE.

909.9 Design fire. The design fire shall be based on a ~~*Q* of not less than 5,000 Btu/s (5275 kW) unless a~~ rational analysis ~~is~~ performed by the registered design professional and approved by the building official. The design fire shall be based on the analysis in accordance with Section 909.4 and this section.

909.9.2 Separation distance. Determination of the design fire shall include consideration of the type of fuel, fuel spacing and configuration. ~~The ratio of the separation distance to the fuel equivalent radius shall not be less than 4. The fuel equivalent radius shall be the radius of a circle of equal area to floor area of the fuel package. The design fire shall be increased if other combustibles are within the separation distance as determined by:~~

~~$R = [Q/(12\pi q'')]^{1/2}$ **(Equation 9-8)**~~

~~where:~~

~~q'' = Incident radiant heat flux required for non piloted ignition, Btu/ft2 - s (W/m^2).~~

~~Q = Heat release from fire, Btu/s (kW).~~

~~R = Separation distance from target to center of fuel package, feet (m).~~

909.10.4 Automatic dampers. Automatic dampers~~, regardless of the purpose for which they are~~ installed within the smoke control system~~,~~ shall be tested and listed in accordance with ~~and conform to~~ the requirements of ~~approved,~~ recognized standards as follows: UL 555, UL 555C, UL 555S, and AMCA 511.

909.12.1 Wiring. In addition to meeting requirements of the ~~ICC~~ *Electrical Code*, ~~all~~ mechanical smoke control wiring, regardless of voltage, shall be fully enclosed within continuous raceways. The requirement of this section shall apply only to wiring extending from the fire alarm system control unit that activates any required smoke-control system component such as relays, fans, dampers, or stair pressurization systems.

[F] 909.16 Fire-fighter's smoke control panel. A fire-fighter's smoke control panel for fire department emergency response purposes only shall be provided and shall include manual control or override of automatic control for mechanical smoke control systems. The panel shall be located in a fire command center complying with Section 911 in high rise buildings or buildings with smoke protected assembly seating. In all other buildings, the fire fighter's smoke control panel shall be installed in an approved location adjacent to the fire alarm control panel.~~, and~~ The fire fighter's smoke control panel shall comply with Sections 909.16.1 through 909.16.3.

909.20 Smokeproof enclosures. Where required by Section 1019.1.8, a smokeproof enclosure shall be constructed in accordance with this section. A smokeproof enclosure shall consist of an enclosed interior exit stairway that conforms to Section 1019.1 and an outside balcony or ventilated vestibule meeting the requirements of this section. Where access to the roof is required by Section 1003.3.3.12 ~~the *International Fire Code*~~, such access shall be from the smokeproof enclosure where a smokeproof enclosure is required.

909.20.4 ~~**Mechanical ventilation alternative.** The provisions of Sections 909.20.4.1 through 909.20.4.4 shall apply to ventilation of smokeproof enclosures by mechanical means.~~ **Stair pressurization alternative.** As an alternative method, stairways may be pressurized. If this option is elected, stairway enclosures shall be pressurized by mechanical means, and vestibules are not required. The stairway enclosure, including exit doors, shall be designed and constructed

to pressurize air leakage to 300 cfm per floor when under a minimum pressure differential of 0.3 inches of water across the door.

909.20.4.1 ~~**Vestibule doors.** The door assembly from the building into the vestibule shall be a fire door complying with Section 715.3. The door assembly from the vestibule to the stairway shall have not less than a 20-minute fire protection rating in accordance with Section 715.3. The door from the building into the vestibule shall be provided with gaskets or other provisions to minimize air leakage.~~ **Doors.** The maximum degree of pressurization shall be such that the opening of the stairway doors can be accomplished with a force not to exceed 35 pounds measured at the door latch.

909.20.4.2 ~~**Vestibule ventilation.** The vestibule shall be supplied with not less than one air change per minute and the exhaust shall not be less than 150 percent of supply. Supply air shall enter and exhaust air shall discharge from the vestibule through separate, tightly constructed ducts used only for that purpose. Supply air shall enter the vestibule within 6 inches (152 mm) of the floor level. The top of the exhaust register shall be located at the top of the smoke trap but not more than 6 inches (152 mm) down from the top of the trap, and shall be entirely within the smoke trap area. Doors in the open position shall not obstruct duct openings. Duct openings with controlling dampers are permitted where necessary to meet the design requirements, but dampers are not otherwise required.~~ **Pressurization system.** The pressurization system shall be designed to provide 0.15 inch of water column minimum differential pressure across any enclosed stairway door with all doors closed.

The pressurization system shall also be designed with the assumption that during a fire situation the following doors are fully open: the fire floor, adjacent doors above and below the fire floor and the door of exit discharge from the enclosure. The average velocity at each open door with both fans operating shall be no less than 300 feet per minute measured on 12-inch centers in a horizontal and vertical traverse of the door opening no more than 6 inches or less than 3 inches from the edge of the opening with each velocity reading indicating positive airflow from the exit stairway.

Each stairway enclosure shall have a separate pressurization system independent of all other mechanical systems.

909.20.4.2.1 ~~**Engineered ventilation system.** Where a specially engineered system is used, the system shall exhaust a quantity of air equal to not less than 90 air changes per hour from any vestibule in the emergency operation mode and shall be sized to handle three vestibules simultaneously. Smoke detectors shall be located at the floor-side entrance to each vestibule and shall activate the system for the affected vestibule. Smoke detectors shall be installed in accordance with Section 907.10.~~ **Supply fans.** The fan and associated air-distribution system serving the stairway pressurization system shall be enclosed in a two-hour fire-rated enclosure.

Exceptions:

1. Exposed roof-mounted fans.
2. Duct work and fans located within the stairway enclosure.

909.20.4.3 ~~**Smoke trap.** The vestibule ceiling shall be at least 20 inches (508 mm) higher than the door opening into the vestibule to serve as a smoke and heat trap and to provide an upward-moving air column. The height shall not be decreased unless approved and justified by design and test.~~ **Supply air.** The supply air for each pressurization system shall be drawn from at least two points, one located within 20 feet of ground level and the other(s) located with at least a 50-foot separation vertically, each served by a separate fan or fans sized for a portion of the total air. Each intake point shall be equipped with a products of combustion detector to deactivate the fan and close dampers associated with that intake point so as to prevent smoke from being drawn in through the intake. Each

system shall be ducted separately. Not less than one point of injection of air for every three floors or portion thereof shall be provided.

909.20.4.4 ~~**Stair shaft air movement system.** The stair shaft shall be provided with a dampered relief opening and supplied with sufficient air to maintain a minimum positive pressure of 0.10 inch of water (25 Pa) in the shaft relative to the vestibule with all doors closed.~~ **Operation of equipment.** The activation of the pressurization equipment shall be initiated by a smoke detector installed outside the enclosure door in an approved location. The activation of the closing device on any door shall activate the closing devices on all floors of the smoke-control enclosure at all levels. When the closing device for the stair shaft door is activated by a smoke detector or power failure, the pressurization system shall go into operation.

909.20.5 ~~**Stair pressurization alternative.** Where the building is equipped throughout with an automatic sprinkler system in accordance with Section 903.3.1.1, the vestibule is not required, provided that interior exit stairways are pressurized to a minimum of 0.15 inch of water (37 Pa) and a maximum of 0.35 inch of water (87 Pa) in the shaft relative to the building measured with all stairway doors closed under maximum anticipated stack pressures.~~ **Standby power.** All pressurization fans and smoke-control devices shall be connected to the building standby power system.

909.20.6 ~~**Ventilating equipment.** The activation of ventilating equipment required by the alternatives in Sections 909.20.4 and 909.20.5 shall be by smoke detectors installed at each floor level at an approved location at the entrance to the smokeproof enclosure. When the closing device for the stair shaft and vestibule doors is activated by smoke detection or power failure, the mechanical equipment shall activate and operate at the required performance levels. Smoke detectors shall be installed in accordance with Section 907.10.~~ **Acceptance testing.** Each installation shall be tested prior to occupancy. Tests shall be scheduled to allow for observation by the building official and/or the fire marshal prior to issuance of a temporary or permanent certificate of occupancy. The following tests shall be performed to verify the function of each item and the complete system:

1. Smoke detectors, fire alarms, voice communication and intercommunication systems.
2. Static pressure test at any floor location.
3. Door opening force test at any floor location.
4. Airflow through the doors shall be measured in the traverse plane for every square foot of door opening area. This test shall be performed at the following four locations:
   - 4.1 The exit door.
   - 4.2 Three adjacent floors picked at random by the building official.

Exception: Stair leakage rate tests need not be performed if the stair pressurization system meets all other requirements of this section.

909.20.6.1 — DELETE IN ITS ENTIRETY.
909.20.6.2 — DELETE IN ITS ENTIRETY.
909.20.6.3 — DELETE IN ITS ENTIRETY.

910.1 General. Where required by this code ~~or otherwise installed~~, smoke and heat vents or mechanical smoke exhaust systems and draft curtains shall conform to the requirements of this section.

Exceptions:

1. ~~Frozen food w~~Warehouses used solely for storage of Class I and Class II commodities where protected by an approved automatic sprinkler system.

2. Where areas of buildings are equipped with early suppression fast-response (ESFR) sprinklers, automatic smoke and heat vents shall not be required within these areas.

[F] 910.2 Where required. ~~Approved s~~Smoke and heat vents shall be installed in the roofs of one-story buildings or portions thereof occupied for the uses set forth in Sections 910.2.1 through 910.2.4.

[F] 910.2.2 Group H. Buildings and portions thereof used as a Group H-2 or H-3 occupancy having over 15,000 square feet (1394 m^2)in a single floor area. ~~as shown:~~

~~1. In occupancies classified as Group H-2 or H-3, any of which are over 15,000 square feet (1394 m^2) in single floor area.~~

Exception: Buildings of noncombustible construction containing only noncombustible materials.

~~2. In areas of buildings in Group H used for storing Class 2, 3, and 4 liquid and solid oxidizers, Class 1 and unclassified detonable organic peroxides, Class 3 and 4 unstable (reactive) materials, or Class 2 or 3 water-reactive materials as required for a high hazard commodity classification.~~

~~**Exception:** Buildings of noncombustible construction containing only noncombustible materials.~~

TABLE 910.3

REQUIREMENTS FOR DRAFT CURTAINS AND SMOKE AND HEAT VENTS[a]

OCCUPANCY GROUP AND COMMODITY CLASSIFICATION	DESIGNATED STORAGE HEIGHT (feet)	MINIMUM DRAFT CURTAIN DEPTH (feet)	MAXIMUM AREA FORMED BY DRAFT CURTAINS (square feet)	VENT AREA TO FLOOR AREA RATIO[c]	MAXIMUM SPACING OF VENT CENTERS (feet)	MAXIMUM DISTANCE TO VENTS FROM WALL OR DRAFT CURTAINS[b] (feet)
Groups F-1 and S-1 ~~Group F-1~~						
High-piled storage (see Section 910.2.3 I-IV (Option 1) ~~Group S-1 I-IV (Option 1)~~						
High-piled Storage (see Section 9810.2.3 I-IV (Option 2) ~~Group S-1 I-IV (Option 2)~~						
High-piled Storage (see Section 910.2.3 High-Hazard (Option 1) ~~Group S-1 High Hazard (Option 1)~~						
High-piled storage (see Section 910.2.3) High Hazard (Option 2) ~~Group S-1 High Hazard (Option 2)~~						

c. Where draft curtains are not required, the vent area to floor area ratio shall be calculated based on a minimum draft curtain depth of 6 feet (Option 1).

***NOTE: PORTIONS OF THIS TABLE 910.3 NOT SHOWN TO REMAIN AS SET FORTH IN THE 2003 INTERNATIONAL BUILDING CODE**

911.1 Features. Where required by other sections of this code, a fire command center for fire department operations shall be provided. The location and accessibility of the fire command center room shall be on the building floor having street access. Access to the room shall be either directly from the exterior, through an entrance lobby or through a two-hour rated corridor leading directly to the exterior. The room shall be separated from the remainder of the building by not less than a ~~1~~ 2-hour fire-resistance-rated fire barrier. The room shall be a minimum of 96 square feet (9 m²) with a minimum dimension of 8 feet (2438 mm). A layout of the fire command center and all features required by the section to be contained therein shall be submitted for approval prior to installation. The fire command center shall comply with NFPA 72 and shall contain the following features~~.~~:

1. The emergency voice/alarm communication system unit.
2. The fire department communications unit.
3. Fire detection and alarm system annunciator unit.
4. Annunciator unit visually indicating the location of the elevators and whether they are operational.
5. Status indicators and controls for air-handling systems.
6. The fire-fighter's control panel required by Section 909.16 for smoke control systems installed in the building.
7. Controls for unlocking stairway doors simultaneously.
8. Sprinkler valve and water-flow detector display panels.
9. Emergency and standby power status indicators.
10. A telephone for fire department use with controlled access to the public telephone system.
11. Fire pump status indicators.
12. Schematic building plans indicating the typical floor plan and detailing the building core, means of egress, fire protection systems, fire-fighting equipment and fire department access.
13. Work table.
14. Generator supervision devices, manual start and transfer features.
15. Public address system, where specifically required by other sections of this code.
16. Battery power pack to provide continuous power for fire detection and alarm systems during normal/standby power switchover.
17. A means to automatically switch an alarm signal to an approved central station.
18. Two handsets per each 10 stories in building height.

CHAPTER 10
MEANS OF EGRESS

SECTION 1002
DEFINITIONS

~~**ACCESSIBLE MEANS OF EGRESS.** A continuous and unobstructed way of egress travel from any point in a building or facility that provides an accessible route to an area of refuge, a horizontal exit or a public way.~~

AISLE. An exit access component that defines and provides a path of egress travel.

~~**AREA OF REFUGE.** An area where persons unable to use stairways can remain temporarily to await instructions or assistance during emergency evacuation.~~

MERCHANDISE PAD. An area for display for display of merchandise surrounded by aisles, permanent fixtures or walls. Merchandise pads contain elements such as non-fixed and moveable fixtures, cases, racks, counters, and partitions as indicated in Section 105.2 from which customers browse or shop.

STAIRWAY. One or more flights of stairs, either exterior or interior, with the necessary landings and platforms connecting them, to form a continuous and uninterrupted passage from one level to another. Stairs or ladders used only to attend equipment or to access an attic or window well are not considered as a stairway.

1003.2 Ceiling height. The means of egress shall have a ceiling height of not less than 7 feet, 6 inches (~~2134~~ 2286 mm).

Exceptions:

1. Sloped ceilings in accordance with Section 1208.2.
2. Ceilings of dwelling units and sleeping units within residential occupancies in accordance with Section 1208.2.
3. Allowable projections in accordance with Section 1003.3.
4. Stair headroom in accordance with Section 1009.2.
5. Door height in accordance with Section 1008.1.1.

1003.3 Reserved. ~~**Protruding objects.** Protruding objects shall comply with the requirements of Sections 1003.3.1 through 1003.3.4.~~

~~**1003.3.1 Headroom.** Protruding objects are permitted to extend below the minimum ceiling height required by Section 1003.2 provided a minimum headroom of 80 inches (2032 mm) shall be provided for any walking surface, including walks, corridors, aisles and passageways. Not more than 50 percent of the ceiling area of a means of egress shall be reduced in height by protruding objects.~~

~~**Exception:** Door closers and stops shall not reduce headroom to less than 78 inches (1981 mm).~~

~~A barrier shall be provided where the vertical clearance is less than 80 inches (2032 mm) high. The leading edge of such a barrier shall be located 27 inches (686 mm) maximum above the floor.~~

~~**1003.3.2 Free-standing objects.** A free-standing object mounted on a post or pylon shall not overhang that post or pylon more than 12 inches (305 mm) where the lowest point of the leading edge is more than 27 inches (686 mm) and less than 80 inches (2032 mm) above the walking surface. Where a sign or other obstruction is mounted between posts or pylons and the clear distance between the posts or pylons is greater than 12 inches (305 mm), the lowest edge of such sign or obstruction shall be 27 inches (685 mm) maximum or 80 inches (2030 mm) minimum above the finish floor or ground.~~

~~**Exception:** This requirement shall not apply to sloping portions of handrails serving stairs and ramps.~~

~~**1003.3.3 Horizontal projections.** Structural elements, fixtures or furnishings shall not project horizontally from either side more than 4 inches (102 mm) over any walking surface between the heights of 27 inches (686 mm) and 80 inches (2032 mm) above the walking surface.~~

~~**Exception:** Handrails serving stairs and ramps are permitted to protrude 4.5 inches (114 mm) from the wall.~~

~~**1003.3.4 Clear width.** Protruding objects shall not reduce the minimum clear width of accessible routes as required in Section 1104.~~

1003.5 Elevation change. Where changes in elevation of less than 12 inches (305 mm) exist in the means of egress, sloped surfaces shall be used. Where the slope is greater than one unit vertical in 20 units horizontal (5-percent slope), ramps complying with Section 1010 shall be used. Where the difference in elevation is 6 inches (152 mm) or less, the ramp shall be equipped with either handrails or floor finish materials that contrast with adjacent floor finish materials.

Exceptions:

1. A single step with a maximum riser height of 7 inches (178 mm) is permitted for buildings with occupancies in Groups F, H, R-2 and R-3 as applicable in Section 101.2, and Groups S and U at exterior doors not required to be accessible by Chapter 11.

2. A stair with a single riser or with two risers and a tread is permitted at locations not required to be accessible by Chapter 11, provided that the risers and treads comply with Section 1009.3, the minimum depth of the tread is 13 inches (330 mm) and at least one handrail complying with Section 1009.11 is provided within 30 inches (762 mm) of the centerline of the normal path of egress travel on the stair.

3. ~~An~~ A step is permitted in aisles serving seating that has a difference in elevation less than 12 inches (305 mm) ~~is permitted~~ at locations not required to be accessible by Chapter 11, provided that the risers and treads comply with Section 1024.11 and the aisle is provided with a handrail complying with Section 1024.13.

Any change in elevation in a corridor serving nonambulatory persons in a Group I-2 occupancy shall be by means of a ramp or sloped walkway.

1003.7 Elevators, escalators and moving walks. Elevators, escalators and moving walks shall not be used as a component of a required means of egress from any other part of the building.

~~**Exception:** Elevators used as an accessible means of egress in accordance with Section 1007.4.~~

1004.1 Design occupant load. In determining means of egress requirements, the number of occupants for whom means of egress facilities shall be provided shall be determined in accordance with this section, unless a reduced occupant load is specifically approved by the building official. ~~established by the largest number computed in accordance with Sections 1004.1.1 through 1004.1.3~~. Where occupants from accessory areas egress through a primary space, the calculated occupant load for the primary space shall include the total occupant load of the primary space plus the number of occupants egressing through it from the accessory area.

Exception: Accessory spaces that are used by the primary occupants only.

~~**1004.1.1 Actual number.** The actual number of occupants for whom each occupied space, floor or building is designed.~~

~~**1004.1.2 Number by Table 1004.1.2**~~ **Areas without fixed seating.** The number of occupants shall be computed at the rate of one occupant per unit of area as prescribed in Table ~~1004.1.2~~ 1004.1.1. For areas without fixed seating, the occupant load shall not be less than that number determined by dividing the floor area under consideration by the occupant per unit of area factor assigned to the occupancy as set forth in Table 1004.1.1. Where an intended use is not listed in Table 1004.1.1, the building official shall establish a use based on a listed use that most nearly resembles the intended use.

Exception: Where approved by the building official, the actual number of occupants for whom each occupied space, floor or building is designed, although less than those determined by calculation, shall be permitted to be used in the determination of the design occupant load.

TABLE ~~1004.1.2~~ 1004.1.1
MAXIMUM FLOOR AREA ALLOWANCES PER OCCUPANT[a]

~~OCCUPANCY~~ FUNCTION OF THE SPACE	FLOOR AREA IN SQ. FT. PER OCCUPANT
Agricultural building	300 gross
Aircraft hangars	500 gross
Airport terminal	
Baggage claim	20 gross
Baggage handling	300 gross
Concourse	100 gross
Waiting Areas	15 gross
Assembly	
Gaming floors (keno, slots, etc.)	11 gross
Arcade/Game rooms	15 gross
Assembly with fixed seats	See Section 1004.7

Assembly without fixed seats Concentrated (chairs only– not fixed) auditoriums, churches and chapels, dance floors, lobbies accessory to assembly occupancies, lodge rooms, reviewing stands, stadiums, waiting areas Standing space Unconcentrated (tables and chairs) conference rooms, dining rooms, drinking establishments, multi-use gymnasiums, lounges, and stages	 7 net 5 net 15 net
Bowling centers, allow 5 persons for each lane including 15 feet of runway, and for additional areas.	7 net
Business areas	100 gross
Children's homes and homes for the aged	80 net
Courtrooms–other than fixed seating areas	40 net
Day care (for children or the aged)	35 net
Dormitories	50 gross
Educational Classroom area Shops and other vocational room areas	 20 net 50 net
Exercise rooms (aerobics, gymnasiums)	50 gross
H-5 Fabrication and manufacturing areas	200 gross
Industrial areas	100 gross
Institutional areas Inpatient treatment areas Outpatient areas Sleeping areas	 240 gross 100 gross 120 gross
Kitchens, commercial	200 gross
Library Reading rooms Stack area	 50 net 100 gross
Locker rooms	50 gross

Mercantile Areas on other floors Basement and grade floor areas Storage, stock, shipping areas	 60 gross 30 gross 300 gross
Parking garages	200 gross
Residential R-1, R-2, R-4 R-3	 200 gross 300 gross
Skating rinks, swimming pools Rink and pool Decks	 50 gross 15 gross
Stages and platforms	15 net
Accessory storage areas, mechanical equipment room	300 gross
Warehouses	500 gross

For SI: 1 square foot = 0.0929 m²

a. Where an occupancy or use is not specifically listed, the building official shall determine the occupant load using the occupancy or use it most nearly resembles.

~~**1004.1.3 Number by combination.** Where occupants from accessory spaces egress through a primary area, the calculated occupant load for the primary space shall include the total occupant load of the primary space plus the number of occupants egressing through it from the accessory space.~~

1004.2 Increased occupant load. The occupant load permitted in any building or portion thereof is permitted to be increased from that number established for the occupancies in Table 1004.1.~~2~~1 provided that all other requirements of the code are also met based on such modified number and the occupant load shall not exceed one occupant per ~~5~~ 7 square feet (~~0.47~~ 0.65 m^2) of occupiable floor space. Where required by the building official, an approved aisle, seating or fixed equipment diagram substantiating any increase in occupant load shall be submitted. Where required by the building official, such diagram shall be posted.

1004.7 Fixed seating. For areas having fixed seats and aisles, the occupant load shall be determined by the number of fixed seats installed therein. The occupant load for areas in which fixed seating is not installed, such as waiting spaces and wheelchair spaces, shall be determined in accordance with Section 1004.1.1 and added to the number of fixed seats.

For areas having fixed seating without dividing arms, the occupant load shall not be less than the number of seats based on one person for each 18 inches (457 mm) of seating length.

The occupant load of seating booths shall be based on one person for each 24 inches (610 mm) of booth seat length measured at the backrest of the seating booth.

****Delete TABLE 1005.1 from code and replace with the following****

TABLE 1005.1
EGRESS WIDTH PER OCCUPANT SERVED

OCCUPANCY	STAIRWAYS (inches per occupant)	OTHER EGRESS COMPONENTS (inches per occupant)
All occupancies	0.3	0.2

1006.2 Illumination level. The means of egress illumination level shall not be less than 1 foot-candle (11 lux) at the ~~floor~~ walking surface level.

> **Exception:** For auditoriums, theaters, concert or opera halls and similar assembly occupancies, the illumination at the ~~floor~~ walking surface level is permitted to be reduced during performances to not less than 0.2 foot-candle (2.15 lux) provided that the required illumination is automatically restored upon activation of a premise's fire alarm system where such system is provided.

1006.3 Illumination emergency power. The power supply for means of egress illumination shall normally be provided by the premise's electrical supply.

In the event of power supply failure, an emergency electrical system shall automatically illuminate the following areas:

1. ~~Exit access~~ Aisles and unenclosed egress stairways corridors, ~~passageways and aisles~~ in rooms and spaces ~~which~~ that require two or more means of egress.

2. ~~Exit access~~ Aisles and corridors, ~~and~~ exit enclosures and exit passageways ~~stairways located~~ in buildings required to have two or more exits.

3. Exterior egress components at other than the level of exit discharge until exit discharge is accomplished for buildings required to have two or more exits.

4. Interior exit discharge elements, as permitted in Section 1023.1, in buildings required to have two or more exits.

5. ~~The portion of the exterior exit discharge immediately adjacent to~~ Exterior landings as required by Section 1008.1.5 exit discharge doorways in buildings required to have two or more exits.

The emergency power system shall provide power for a duration of not less than 90 minutes and shall consist of storage batteries, unit equipment or an on-site generator. The installation of the emergency power system shall be in accordance with Section 2702.

SECTION 1007
~~ACCESSIBLE MEANS OF EGRESS~~
RESERVED

***NOTE: DELETE THIS SECTION IN ITS ENTIRETY AND RESERVE.**

1008.1.2 Door swing. Egress doors shall be side-hinged swinging.

Exceptions:

1. Private garages, office areas, factory and storage areas with an occupant load of 10 or less.

2. Group I-3 occupancies used as a place of detention.

3. Critical or intensive care patient rooms within suites of health care facilities.

~~3.~~ 4. Doors within or serving a single dwelling unit in Groups R-2 and R-3 as applicable in Section 101.2.

~~4.~~ 5. In other than Group H occupancies, revolving doors complying with Section 1008.1.3.1.

~~5.~~ 6. In other than Group H occupancies, horizontal sliding doors complying with Section 1008.1.3.3 are permitted in a means of egress.

~~6.~~ 7. Power-operated doors in accordance with Section ~~1008.1.3.2~~ 1008.1.3.1.

8. Doors serving a bathroom within an individual sleeping unit in Group R-1.

Doors shall swing in the direction of egress travel where serving an occupant load of 50 or more persons or a Group H occupancy.

The opening force for interior side-swinging doors without closers shall not exceed a 5-pound (22 N) force. For other side-swinging, sliding and folding doors, the door latch shall release when subjected to a 15-pound (67 N) force. The door shall be set in motion when subjected to a 30-pound (133 N) force. The door shall swing to a full-open position when subjected to a 15-pound (67 N) force. Forces shall be applied to the latch side.

1008.1.3.4 Electronic locks. ~~**Access-controlled egress doors.** The entrance doors in a means of egress in buildings with an occupancy in Group A, B, E, M, R-1 or R-2 and entrance doors to tenant spaces in occupancies in Groups A, B, E, M, R-1 and R-2 are~~

~~permitted to be equipped with an approved entrance and egress access control system which shall be installed in accordance with all of the following criteria:~~

~~1. A sensor shall be provided on the egress side arranged to detect an occupant approaching the doors. The doors shall be arranged to unlock by a signal from or loss of power to the sensor.~~

~~2. Loss of power to that part of the access control system which locks the doors shall automatically unlock the doors.~~

~~3. The doors shall be arranged to unlock from a manual unlocking device located 40 inches to 48 inches (1016 mm to 1219 mm) vertically above the floor and within 5 feet (1524 mm) of the secured doors. Ready access shall be provided to the manual unlocking device and the device shall be clearly identified by a sign that reads "PUSH TO EXIT." When operated, the manual unlocking device shall result in direct interruption of power to the lock—independent of the access control system electronics—and the doors shall remain unlocked for a minimum of 30 seconds.~~

~~4. Activation of the building fire alarm system, if provided, shall automatically unlock the doors, and the doors shall remain unlocked until the fire alarm system has been reset.~~

~~5. Activation of the building automatic sprinkler or fire detection system, if provided, shall automatically unlock the doors. The doors shall remain unlocked until the fire alarm system has been reset.~~

~~6. Entrance doors in buildings with an occupancy in Group A, B, E or M shall not be secured from the egress side during periods that the building is open to the general public.~~

1008.1.3.4.1 Definitions. For the purpose of this section, the following definitions apply:

FAIL SAFE. Shall mean that the loss of power to the part of the system that locks the door shall automatically unlock the door.

FAIL SECURE. Shall mean that the loss of power to the locking system will allow the doors to remain locked.

1008.1.3.4.2 Requirements. Except as specified in other parts of this code, electronic locks shall meet the following requirements:

1. Electronic locks that are electronically locked from the ingress side and can be mechanically unlocked from the egress side, can be fail secure from the ingress side.

Exception: Stairway enclosure re-entry doors required by Section 403 shall be fail safe.

2. Electronic locks that unlock electronically from the egress side shall be fail safe and must be unlocked by a listed direct power-interrupting device without time-delay. If a motion sensor is used, a secondary in-line releasing device in the form of a button conspicuously located near the door shall be installed. If the lock is controlled by a relay, removal of power from the relay shall also cause the lock to fail open.

   Exception: Egress-control devices meeting the requirement of Section 1008.1.8.6 may be of the time-delay type.

3. Doors in excess of the number required for exits may be electronically controlled, provided there is a push button deactivating device (minimum of 1 ½ inch in size) conspicuously located near the door along with a sign stating "PUSH TO OPEN DOOR".

4. An exit door from an elevator lobby may be controlled by an electronic lock with an emergency release device (direct inline power interrupting switch) on the lobby side, provided the building has an automatic fire alarm system, including smoke detectors, located in the lobby and corridors and/or a complete sprinkler system that is interconnected to the fire alarm system. The release device may be either a manual fire alarm pull station or a push button (minimum of 1 ½ inch in size) located near the door with a sign stating: "PUSH/PULL TO RELEASE DOOR IN AN EMERGENCY". The locking device must release upon activation of the fire alarm or the sprinkler system and must be manually reset after being released.

1008.1.4 Floor elevation. There shall be a floor or landing on each side of a door. Such floor or landing shall be at the same elevation on each side of the door. Landings shall be level except for exterior landings, which are permitted to have a slope not to exceed 0.25 unit vertical in 12 units horizontal (2-percent slope).

Exceptions:

1. Doors serving individual dwelling units in Groups R-2 and R-3 as applicable in Section 101.2 where the following apply:

   1.1. A door is permitted to open at the top step of an interior flight of stairs, provided the door does not swing over the top step.

   1.2. Screen doors and storm doors are permitted to swing over stairs or landings.

2. Exterior doors as provided for in Section 1003.5, Exception 1, and Section 1017.2, which are not on an accessible route.

3. In Group R-3 occupancies, the landing at an exterior doorway shall not be more than 7 3/4 inches (197 mm) below the top of the threshold, provided the door, other than an exterior storm or screen door, does not swing over the landing.

4. Variations in elevation due to differences in finish materials, but not more than 0.5 inch (12.7 mm).

~~5. Exterior decks, patios or balconies that are part of Type B dwelling units and have impervious surfaces, and that are not more than 4 inches (102 mm) below the finished floor level of the adjacent interior space of the dwelling unit.~~

1008.1.6 Thresholds. Thresholds at doorways shall not exceed 0.75 inch (19.1 mm) in height for sliding doors serving dwelling units or 0.5 inch (12.7 mm) for other doors. Raised thresholds and floor level changes greater than 0.25 inch (6.4 mm) at doorways shall be beveled with a slope not greater than one unit vertical in two units horizontal (50-percent slope).

Exception: The threshold height shall be limited to 7¾ inches (197 mm) where the occupancy is Group R-2 or R-3 as applicable in Section 101.2, the door is an exterior door that is not a component of the required means of egress, and the door, other than an exterior storm or screen door, does not swing over the landing or step ~~and the doorway is not on an accessible route~~.

1008.1.7 Door arrangement. Space between two doors in series shall be 48 inches (1219 mm) minimum plus the width of a door swinging into the space. Doors in series shall swing either in the same direction or away from the space between doors.

Exceptions:

1. The minimum distance between horizontal sliding power-operated doors in a series shall be 48 inches (1219 mm).

2. Storm and screen doors serving individual dwelling units in Groups R-2 and R-3 as applicable in Section 101.2 need not be spaced 48 inches (1219 mm) from the other door.

~~3. Doors within individual dwelling units in Groups R-2 and R-3 as applicable in Section 101.2 other than within Type A dwelling units.~~

1008.1.8 Door operations. Whenever a building or space is occupied, ~~E~~except as specifically permitted by this section, egress doors shall be readily openable from the egress side without the use of a key or special knowledge or effort.

1008.1.8.3 Locks and latches. Locks and latches shall be permitted to prevent operation of doors where any of the following exists:

1. Places of detention or restraint.

2. In buildings in occupancy Groups A ~~having an occupant load of 300 or less, Groups~~ B, F, M and S, ~~and in churches,~~ the main exterior door or doors are permitted to be equipped with key-operated locking devices from the egress side provided:

   2.1. ~~The locking device is readily distinguishable as locked,~~

   ~~2.2.~~ A readily visible durable sign is posted on the egress side on or adjacent to the door stating: "THIS DOOR TO REMAIN UNLOCKED WHEN BUILDING IS OCCUPIED". The sign shall be in letters 1 inch (25 mm) high on a contrasting background,

   2.2 ~~2.3~~. The use of the ~~key-operated~~ locking device is revokable by the building official for ~~due cause~~ failure to conform to any applicable requirement of this code or other laws.

3. Where egress doors are used in pairs, approved automatic flush bolts shall be permitted to be used, provided that the door leaf having the automatic flush bolts has no doorknob or surface-mounted hardware.

4. Doors from individual dwelling or sleeping units of Group R occupancies having an occupant load of 10 or less are permitted to be equipped with a night latch, dead bolt or security chain, provided such devices are openable from the inside without the use of a key or tool.

5. In buildings in occupancy Group B that have an occupant load of 10 or less, doors may be equipped with a manually operated deadbolt in addition to a door latch.

1008.1.8.4 Bolt locks. Manually operated flush bolts or surface bolts that operate vertically are not permitted.

Exceptions:

1. On doors not required for egress in individual dwelling units or sleeping units.
2. ~~Where a pair of doors serves a storage or equipment room, manually operated edge- or surface- mounted bolts are permitted on the inactive leaf.~~ When one active leaf of a pair of doors provides the required exit width, manually operated edge- or surface-mounted bolts may be used on the inactive leaf and a door closer need not be provided on the inactive leaf.

3. In buildings in occupancy Group B that have an occupant load of 10 or less, doors may be equipped with a manually operated deadbolt in addition to a door latch.

1008.1.8.5 Unlatching. The unlatching of any door or leaf shall not require more than one operation.

Exceptions: ~~More than one operation is permitted for unlatching doors in the following locations:~~

1. Places of detention or restraint.
2. Where manually operated bolt locks are permitted by Section 1008.1.8.4.
3. Doors with automatic flush bolts as permitted by Section 1008.1.8.3, Exception 3.
4. Doors from individual dwelling units and guestrooms of Group R occupancies as permitted by Section 1008.1.8.3, Exception 4.

1008.1.8.6 Delayed egress locks. Approved, listed, delayed egress locks shall be permitted to be installed on doors serving any occupancy except Group ~~A, E and~~ H occupancies in buildings that are equipped throughout with an automatic sprinkler system in accordance with Section 903.3.1.1 or an approved automatic smoke or heat detection system installed in accordance with Section 907, provided that the doors unlock in accordance with Items 1 through 6 below. A building occupant shall not be required to pass through more than one door equipped with a delayed egress lock before entering an exit.

1. The doors unlock upon actuation of the automatic sprinkler system or automatic fire detection system.
2. The doors unlock upon loss of power controlling the lock or lock mechanism.
3. The door locks shall have the capability of being unlocked by a signal from the fire command center.
4. The initiation of an irreversible process which will release the latch in not more than 15 seconds when a force of not more than 15 pounds (67 N) is applied for 1 second to the release device. Initiation of the irreversible process shall activate an audible signal in the vicinity of the door. Once the door lock has been released by the application of force to the releasing device, relocking shall be by manual means only.

   Exception: Where approved, a delay of not more than 30 seconds is permitted.

5. A sign shall be provided on the door located above and within 12 inches (305 mm) of the release device reading: PUSH UNTIL ALARM SOUNDS. DOOR CAN BE OPENED IN 15 [30]SECONDS.
6. Emergency lighting shall be provided at the door.

1008.1.9 Panic and fire exit hardware. Where panic and fire exit hardware is installed, it shall comply with the following:

1. The actuating portion of the releasing device shall extend at least one-half of the door leaf width.
2. A maximum unlatching force of 15 pounds (67 N) applied in the direction of travel.

Each door in a means of egress from an occupancy of Group A or E having an occupant load of 100 or more and any occupancy of Group H-1, H-2, H-3 or H-5 shall not be provided with a latch or lock unless it is panic hardware or fire exit hardware.

If balanced doors are used and panic hardware is required, the panic hardware shall be the push-pad type and the pad shall not extend more than one-half the width of the door measured from the latch side.

1008.2.1 Stadiums. Panic hardware is not required on gates surrounding stadiums where such gates are under constant immediate supervision while the public is present, and further provided that safe dispersal areas based on 3 square feet (0.28 m^2) per occupant are located between the fence and enclosed space. Such required safe dispersal areas shall not be located less than 50 feet (15 240 mm) from the enclosed space. See Section ~~1017~~ 1023.6 for means of egress from safe dispersal areas.

1008.2.2 Security gates. In locations other than on doors where panic hardware is required, security gates may be installed provided they remain open when the premises is occupied by anyone other than security personnel.

1009.1 Stairway width. The width of stairways shall be determined as specified in Section 1005.1, but such width shall not be less than 44 inches (1118 mm). See Section 1007.3 for accessible means of egress stairways.

Exceptions:

1. Stairways serving an occupant load of less than 50 ~~or less~~ shall have a width of not less than 36 inches (914 mm).
2. Spiral stairways as provided for in Section 1009.9.
3. Aisle stairs complying with Section 1024.
4. Where a stairway lift is installed on stairways serving occupancies in Group R-3, or within dwelling units in occupancies in Group R-2, both as applicable in Section 101.2, a clear passage width not less than 20 inches (508 mm) shall be provided. If the seat and platform can be folded when not in use, the distance shall be measured from the folded position.

1009.3 Stair treads and risers. Stair riser heights shall be 7 inches (178 mm) maximum and 4 inches (102 mm) minimum. Stair tread depths shall be 11 inches (279 mm) minimum. The riser height shall be

measured vertically between the leading edges of adjacent treads. ~~The greatest riser height within any flight of stairs shall not exceed the smallest by more than 0.375 inch (9.5 mm).~~ The tread depth shall be measured horizontally between the vertical planes of the foremost projection of adjacent treads and at right angle to the tread's leading edge. ~~The greatest tread depth within any flight of stairs shall not exceed the smallest by more than 0.375 inch (9.5 mm).~~Winder treads shall have a minimum tread depth of 11 inches (279 mm) measured at a right angle to the tread's leading edge at a point 12 inches (305 mm) from the side where the treads are narrower and a minimum tread depth of 10 inches (254 mm). ~~The greatest winder tread depth at the 12-inch (305 mm)walk line within any flight of stairs shall not exceed the smallest by more than 0.375 inch (9.5 mm).~~

Exceptions:

1. Circular stairways in accordance with Section 1009.7.

2. Winders in accordance with Section ~~1009.8~~ 1009.3.1.

3. Spiral stairways in accordance with Section 1009.9.

4. Aisle stairs in assembly seating areas where the stair pitch or slope is set, for sightline reasons, by the slope of the adjacent seating area in accordance with Section 1024.11.2.

5. In occupancies in Group R-3, as applicable in Section 101.2, within dwelling units in occupancies in Group R-2, as applicable in Section 101.2, and in occupancies in Group U, which are accessory to an occupancy in Group R-3, and accessory to individual dwelling units in Group R-2, both as applicable in Section 101.2, the maximum riser height shall be 7.75 inches (197 mm) and the minimum tread depth shall be 10 inches (254 mm), the minimum winder tread depth at the walk line shall be 10 inches (254 mm), and the minimum winder tread depth shall be 6 inches (152 mm). A nosing not less than 0.75 inch (19.1 mm) but not more than 1.25 inches (32 mm) shall be provided on stairways with solid risers where the tread depth is less than 11 inches (279 mm).

6. See the *International Existing Building Code* for the replacement of existing stairways.

7. Alternating tread devices in accordance with Section 1009.10.

8. Private steps and stairways serving an occupant load of less than 10 and stairways to unoccupied roofs may be constructed with an 8-inch maximum (203 mm) rise and a 9-inch minimum (229 mm) run.

1009.3.1 Winders. Winders are not permitted in means of egress stairways except within a dwelling unit. Winder treads shall have a minimum tread depth of not less than 11 inches (279 mm) measured at a right angle to the tread's leading edge at a point 12 inches (305 mm) from the side where the treads are narrower and a minimum tread depth of 10 inches (254 mm).

~~1009.3.1~~ 1009.3.2 Dimensional uniformity. Stair treads and risers shall be of uniform size and shape. For other than winders, circular stairs or spiral stairs, the greatest tread depth within any flight of stairs shall not exceed the smallest tread by more than 0.375 inch (9.5 mm) in any flight of stairs. For winders, circular stairs and spiral stairs, the greatest tread depth at the 12-inch (25

mm) walk line within any flight of stairs shall not exceed the smallest by more than 0.375 inch (9.5 mm).

The greatest riser height within any flight of stairs shall not exceed the smallest riser by more than 0.375 inch (9.5mm) in any flight of stairs. ~~The tolerance between the largest and smallest riser or between the largest and smallest tread shall not exceed 0.375 inch (9.5 mm) in any flight of stairs~~.

Exceptions~~s~~:

~~1.~~ Nonuniform riser dimensions of aisle stairs complying with Section 1024.11.2.

~~2. Consistently shaped winders, complying with Section 1009.8, differing from rectangular treads in the same stairway flight.~~

Where the bottom or top riser adjoins a sloping public way, walkway or driveway having an established grade and serving as a landing, the bottom or top riser is permitted to be reduced along the slope to less than 4 inches (102 mm) in height with the variation in height of the bottom or top riser not to exceed one unit vertical in 12 units horizontal (8-percent slope) of stairway width. The nosings or leading edges of treads at such nonuniform height risers shall have a distinctive marking stripe, different from any other nosing marking provided on the stair flight. The distinctive marking stripe shall be visible in descent of the stair and shall have a slip-resistant surface. Marking stripes shall have a width of at least 1 inch (25 mm) but not more than 2 inches (51 mm).

~~1009.3.2~~ 1009.3.3 Profile. The radius of curvature at the leading edge of the tread shall be not greater than 0.5 inch (12.7 mm). Beveling of nosings shall not exceed 0.5 inch (12.7 mm). Risers shall be solid and vertical or sloped from the underside of the leading edge of the tread above at an angle not more than 30 degrees (0.52 rad) from the vertical. The leading edge (nosings) of treads shall project not more than 1.25 inches (32 mm) beyond the tread below and all projections of the leading edges shall be of uniform size, including the leading edge of the floor at the top of a flight.

Exceptions:

1. Solid risers are not required for stairways that are not required to comply with Section 1007.3, provided that the opening between treads does not permit the passage of a sphere with a diameter of 4 inches (102 mm).

2. Solid risers are not required for occupancies in Group I-3.

1009.5 Stairway construction. All stairways shall be built of materials consistent with the types permitted for the type of construction of the building, as permitted by Section 603.1, except that wood handrails shall be permitted for all types of construction.

1009.5.2 Outdoor conditions. Outdoor stairways and outdoor approaches to stairways shall be designed so that water will not accumulate on walking surfaces. ~~In other than occupancies in Group R-3, and occupancies in Group U that are accessory to an occupancy in Group R-3, treads, platforms and landings that are part of exterior stairways in climates subject to snow or ice shall be protected to prevent the accumulation of same.~~

1009.5.3 Enclosures under stairways. The walls and soffits within enclosed usable spaces under enclosed and unenclosed stairways shall be protected by 1-hour fire-resistance- rated construction, or the fire- resistance rating of the stairway enclosure, whichever is greater. Access to the enclosed space shall not be directly from within the stair enclosure.

Exception: Spaces under stairways serving and contained within a single residential dwelling unit in Group R-2 or R-3 as applicable in Section 101.2.

There shall be no enclosed usable space under exterior exit stairways unless the space is completely enclosed in 1-hour fire-resistance-rated construction. The open space under exterior stairways shall not be used for any purpose.

~~**1009.8Winders.** Winders are not permitted in means of egress stairways except within a dwelling unit.~~

1009.11 Handrails. Stairways shall have handrails on each side. ~~Handrails shall be adequate in strength and attachment in accordance with Section 1607.7.~~ Handrails for ramps, where required by Section 1010.8, shall comply with this section.

Exceptions:

1. Aisle stairs complying with Section 1024 provided with a center handrail need not have additional handrails.

2. Stairways within dwelling units, spiral stairways and aisle stairs serving seating only on one side are permitted to have a handrail on one side only.

3. Decks, patios and walkways that have a single change in elevation where the landing depth on each side of the change of elevation is greater than what is required for a landing do not require handrails.

4. ~~In Group R-3 occupancies, a change in elevation consisting of a single riser at an entrance or egress door does not require handrails.~~ Stairways having less than four risers and serving one individual dwelling unit in Group R-2, R-3, or Group U occupancies need not have handrails.

~~5. Changes in room elevations of only one riser within dwelling units and sleeping units in Group R-2 and R-3 occupancies do not require handrails.~~

1009.11.8 Handrail strength. Handrails shall be adequate in strength and attachment in accordance with Section 1607.7. Where glass is used to provide the handrail, the handrail shall also comply with Section 2407.

1009.12.2 Protection at roof hatch openings. Where the roof hatch opening providing the required access is located within 10 feet (3049 mm) of the roof edge, such roof access or roof edge shall be protected by guards within a 10 foot radius of the opening, installed in accordance with the provisions of Section 1012.

1010.2 Slope. Ramps used as part of a means of egress shall have a running slope not steeper than one unit vertical in 12 units horizontal (8-percent slope). The slope of other pedestrian ramps shall not be steeper than one unit vertical in eight units horizontal (12.5-percent slope).

Exception: Aisle ramp slope in occupancies of Group A shall comply with Section 1024.11.

1010.6.3 Length. The landing length shall be 60 inches (1525 mm) minimum.

Exceptions:

1. Landings in nonaccessible Groups R-2 and R-3 individual dwelling units, as applicable in Section 101.2, are permitted to be 36 inches (914 mm) minimum.

2. Where the ramp is not a part of an accessible route, the length of the landing shall not be required to be more than 48 inches (1220 mm) in the direction of travel.

1010.7 Ramp construction. All ramps shall be built of materials consistent with the types permitted for the type of construction of the building; except that wood handrails shall be permitted for all types of construction. Ramps used as an exit shall conform to the applicable requirements of Sections 1019.1 and 1019.1.1 through 1019.1.3 for ~~vertical~~ exit enclosures.

1010.7.2 Outdoor conditions. Outdoor ramps and outdoor approaches to ramps shall be designed so that water will not accumulate on walking surfaces. ~~In other than occupancies in Group R-3, and occupancies in Group U that are accessory to an occupancy in Group R-3, surfaces and landings which are part of exterior ramps in climates subject to snow or ice shall be designed to minimize the accumulation of same.~~

~~**1010.9.1 Railings.** A rail shall be mounted below the handrail 17 inches to 19 inches (432 mm to 483 mm) above the ramp or landing surface.~~

~~**1010.9.2**~~ **Curb, rail, wall or barrier.** A curb, rail, wall or barrier shall be provided that prevents the passage of a 4-inch-diameter (102 mm) sphere, where any portion of the sphere is within 4 inches (102 mm) of the floor or ground surface.

1010.9.2 Extended floor or ground surface. The floor or ground surface of the ramp run or landing shall extend 12 inches (305 mm) minimum beyond the inside face of a handrail complying with Section 1009.11.

1011.1 Where required. Exits and exit access doors shall be marked by an approved exit sign readily visible from any direction of egress travel. Access to exits shall be marked by readily visible exit signs in cases where the exit or the path of egress travel is not immediately visible to the occupants. Exit sign placement shall be such that no point in ~~an exit access~~ corridor is more than 100 feet (30 480 mm) or the listed viewing distance for the sign, whichever is less, from the nearest visible exit sign.

Exceptions:

1. Exit signs are not required in rooms or areas which require only one exit or exit access.

2. Main exterior exit doors or gates which obviously and clearly are identifiable as exits need not have exit signs where approved by the building official.

3. Exit signs are not required in occupancies in Group U and individual sleeping units or dwelling units in Group R-1, R-2 or R-3.

4. Exit signs are not required in sleeping areas in occupancies in Group I-3.

5. In occupancies in Groups A-4 and A-5, exit signs are not required on the seating side of vomitories or openings into seating areas where exit signs are provided in the concourse that are readily apparent from the vomitories. Egress lighting is provided to identify each vomitory or opening within the seating area in an emergency.

1011.2 Illumination. Exit signs shall be internally or externally illuminated.

~~**Exception:** Tactile signs required by Section 1011.3 need not be provided with illumination.~~

1011.3 Reserved. ~~**Tactile exit signs.** A tactile sign stating EXIT and complying with ICC A117.1 shall be provided adjacent to each door to an egress stairway, an exit passageway and the exit discharge.~~

1011.5.1 Graphics. Every exit sign and directional exit sign shall have plainly legible letters not less than 6 inches (152 mm) high with the principal strokes of the letters not less than 0.75 inch (19.1mm) wide. The word "EXIT" shall have letters having a width not less than 2 inches (51 mm) wide except the letter "I," and the minimum spacing between letters shall not be less than 0.375 inch (9.5 mm). Signs larger than the minimum established in this section shall have letter widths, strokes and spacing in proportion to their height.

The word "EXIT" shall be in high contrast with the background and shall be clearly discernible when the exit sign illumination means is or is not energized. If an arrow or a chevron directional indicator is provided as part of the exit sign, the construction shall be such that the ~~arrow~~ direction of the arrow or chevron direction indicator cannot be readily changed.

1012.1 Where required. Guards shall be located along open-sided walking surfaces, mezzanines, industrial equipment platforms, stairways, ramps and landings which are located more than 30 inches (762 mm) above the floor or grade below. ~~Guards shall be adequate in strength and attachment in accordance with Section 1607.7.~~ Guards shall also be located along glazed sides of stairways, ramps and landings that are located more than 30 inches (762 mm) above the floor or grade below where the glazing provided does not meet the strength and attachment requirements in Section 1607.7.

Exception: Guards are not required for the following locations:

1. On the loading side of loading docks or piers.

2. On the audience side of stages and raised platforms, including steps leading up to the stage and raised platforms.

3. On raised stage and platform floor areas such as runways, ramps and side stages used for entertainment or presentations.

4. At vertical openings in the performance area of stages and platforms.

5. At elevated walking surfaces appurtenant to stages and platforms for access to and utilization of special lighting or equipment.

6. Along vehicle service pits not accessible to the public.

7. In assembly seating where guards in accordance with Section 1024.14 are permitted and provided.

1012.3 Opening limitations. Open guards shall have balusters or ornamental patterns such that a 4-inch-diameter (102 mm) sphere cannot pass through any opening up to a height of 34 inches (864 mm). From a height of 34 inches (864 mm) to 42 inches (1067 mm) above the adjacent walking surfaces, a sphere 8 inches (203 mm) in diameter shall not pass.

Exceptions:

1. The triangular openings formed by the riser, tread and bottom rail at the open side of a stairway shall be of a maximum size such that a sphere of 6 inches (152 mm) in diameter cannot pass through the opening.

2. At elevated walking surfaces for access to and use of electrical, mechanical or plumbing systems or equipment, guards shall have balusters or be of solid materials such that a sphere with a diameter of 21 inches (533 mm) cannot pass through any opening.

3. In areas which are not open to the public within occupancies in Group I-3, F, H or S, balusters, horizontal intermediate rails or other construction shall not permit a sphere with a diameter of 21 inches (533 mm) to pass through any opening.

4. In assembly seating areas, guards at the end of aisles where they terminate at a fascia of boxes, balconies and galleries shall have balusters or ornamental patterns such that a 4-inch-diameter (102 mm) sphere cannot pass through any opening up to a height of 26 inches (660 mm). From a height of 26 inches (660 mm) to 42 inches (1067 mm) above the adjacent walking surfaces, a sphere 8 inches (203 mm) in diameter shall not pass.

5. Within individual dwelling and sleeping units in Groups R-2 and R-3, openings for required guards on the sides of stair treads shall not allow a sphere of 4 3/8 inches (111 mm) to pass through.

1012.5 Mechanical equipment. Guards shall be provided where appliances, equipment, fans, roof hatch openings or other components that require service are located within 10 feet (3048 mm) of a roof edge or open side of a walking surface and such edge or open side is located more than 30 inches (762 mm) above the floor, roof or grade below. The guard shall be constructed so as to prevent the passage of a 21-inch ~~diameter~~ (533 mm) diameter sphere. The guard shall extend not less than 30 inches beyond each end of such appliance, equipment, fan or component.

1012.6 Roof access. Guards shall be provided where the roof hatch opening is located within 10 feet (3048 mm) of a roof edge or open side of a walking surface and such edge or open side is located more than 30 inches (762 mm) above the floor, roof or grade below. The guard shall be constructed so as to prevent the passage of a 21 inch (533 mm) diameter sphere.

1012.7 Guard strength. Guards shall be adequate in strength and attachment in accordance with Section 1607.7. Where glass is used to provide a guard or portion of the guard system, the guard shall also comply with Section 2407.

1013.2 Egress through intervening spaces. Egress through intervening spaces shall be controlled in accordance with this section.

1. Egress from a room or space shall not pass through adjoining or intervening rooms or areas, except where such adjoining rooms or areas are accessory to the area served; are not a high-hazard occupancy and provide a discernible path of egress travel to an exit.

   Exception: Means of egress are not prohibited through adjoining or intervening rooms or spaces in a Group H, S or F occupancy when the adjoining or intervening rooms or spaces are the same or a lesser hazard occupancy group.

2. Egress shall not pass through kitchens, storage rooms, closets or spaces used for similar purposes.

Exception: Means of egress are not prohibited through a kitchen area serving adjoining rooms constituting part of the same dwelling unit or sleeping unit.

3. An exit access shall not pass through a room that can be locked to prevent egress.

4. Means of egress from dwelling units or sleeping areas shall not lead through other sleeping areas, toilet rooms or bathrooms.

~~**Exceptions:**~~

~~1. Means of egress are not prohibited through a kitchen area serving adjoining rooms constituting part of the same dwelling unit or sleeping unit.~~

~~2. Means of egress are not prohibited through adjoining or intervening rooms or spaces in a Group H occupancy when the adjoining or intervening rooms or spaces are the same or a lesser hazard occupancy group.~~

1013.2.2 Group I-2. Habitable rooms or suites in Group I-2 occupancies shall have an exit access door leading directly to ~~an exit access~~ a corridor.

Exceptions:

1. Rooms with exit doors opening directly to the outside at ground level.

2. Patient sleeping rooms are permitted to have one intervening room if the intervening room is not used as an exit access for more than eight patient beds.

3. Special nursing suites are permitted to have one intervening room where the arrangement allows for direct and constant visual supervision by nursing personnel.

4. ~~For rooms other than patient sleeping rooms, suites of rooms are permitted to have one intervening room if the travel distance within the suite to the exit access door is not greater than 100 feet (30 480 mm) and are permitted to have two intervening rooms where the travel distance within the suite to the exit access door is not greater than 50 feet (15 240 mm)~~. For rooms, other than patient sleeping rooms, located within a suite, exit access travel from within the suite shall be permitted through one intervening room where the travel distance to the exit access door is not greater than 100 feet (30 480 mm).

5. For rooms, other than patient sleeping rooms, located within a suite, exit access travel from within the suite shall be permitted through two intervening rooms

where the travel distance to the exit access door is not greater than 50 feet (15 240 mm).

Suites of sleeping rooms shall not exceed 5,000 square feet (465 m^2). Suites of rooms, other than patient sleeping rooms, shall not exceed 10,000 square feet (929 m^2). Any patient sleeping room, or any suite that includes patient sleeping rooms, of more than 1,000 square feet (93 m^2) shall have at least two exit access doors remotely located from each other. Any room or suite of rooms, other than patient sleeping rooms, of more than 2,500 square feet (232 m^2) shall have at least two access doors remotely located from each other. The travel distance between any point in a Group I-2 occupancy and an exit access door in the room shall not exceed 50 feet (15 240 mm). The travel distance between any point in a suite of sleeping rooms and an exit access door of that suite shall not exceed 100 feet (30 480 mm).

1013.3 Common path of egress travel. In occupancies other than Groups H-1, H-2 and H-3, the common path of egress travel shall not exceed 75 feet (22 860 mm). In occupancies in Groups H-1, H-2, and H-3, the common path of egress travel shall not exceed 25 feet (7620 mm). For common path of egress travel in Group A occupancies having fixed seating, see Section 1024.8.

Exceptions:

1. The length of a common path of egress travel in an occupancy in Groups ~~B,~~ F and S shall not be more than 100 feet (30 480 mm), provided that the building is equipped throughout with an automatic sprinkler system installed in accordance with Section 903.3.1.1.

2. Where a tenant space in an occupancy in Groups B, S and U has an occupant load of not more than 30, the length of a common path of egress travel shall not be more than 100 feet (30 480 mm).

3. The length of a common path of egress travel in occupancies in Group I-3 shall not be more than 100 feet (30 480 mm).

4. The length of a common path of egress travel in occupancies in Groups B and R-2 shall not be more than 125 feet (38 100 mm), provided that the building is protected throughout with an approved automatic sprinkler system in accordance with 903.3.1.1.

1013.4.1 Aisles in Groups B and M. In Group B and M occupancies, the minimum clear aisle width shall be determined by Section 1005.1 for the occupant load served, but shall not be less than 36 inches (914 mm).

Exception: Nonpublic aisles serving less than 50 people, and not required to be accessible by Chapter 11 need not exceed 28 inches (711 mm) in width.

~~**1013.4.2 Seating at tables.** Where seating is located at a table or counter and is adjacent to an aisle or aisle accessway,the measurement of required clear width of the aisle or aisle accessway shall be made to a line 19 inches (483 mm) away from and parallel to the edge of the table or~~

~~counter. The 19-inch (483 mm) distance shall be measured perpendicular to the side of the table or counter. In the case of other side boundaries for aisle or aisle accessways, the clear width shall be measured to walls, edges of seating and tread edges, except that handrail projections are permitted.~~

1013.4.2 Aisle accessways in Group M. An aisle accessway shall be provided on at least one side of each element within the merchandise pad. The minimum clear width for an aisle accessway not required to be accessible, shall be 30 inches (762 mm). The required clear width of the aisle accessway shall be measured perpendicular to the elements and merchandise within the merchandise pad. The 30 inch (762 mm) minimum clear width shall be maintained to provide a path to an adjacent aisle accessway. The common path of travel shall not exceed 30 feet (9144 mm) from any point in the merchandise pad.

Exception: For areas serving not more than 50 occupants, the common path of travel shall not exceed 75 feet (22 880 mm).

1013.4.3 Seating at tables. Where seating is located at a table or counter and is adjacent to an aisle or aisle accessway, the measurement of required clear width of the aisle or aisle accessway shall be made to a line 19 inches (483 mm) away from and parallel to the edge of the table or counter. The 19-inch (483 mm) distance shall be measured perpendicular to the side of the table or counter. In the case of other side boundaries for aisle or aisle accessways, the clear width shall be measured to walls, edges of seating and tread edges, except that handrail projections are permitted.

1013.5 Egress balconies. Balconies used for egress purposes shall conform to the same requirements as corridors for width, headroom, dead ends and projections. ~~Exterior balconies shall be designed to minimize accumulation of snow or ice that impedes the means of egress.~~

~~**Exception:** Exterior balconies and concourses in outdoor stadiums shall be exempt from the design requirement to protect against the accumulation of snow or ice.~~

1013.5.1 Wall separation. Exterior egress balconies shall be separated from the interior of the building by walls and opening protectives as required for corridors.

Exception: Separation is not required where the exterior egress balcony is served by at least two stairs ~~and a dead-end travel condition does not require travel past an unprotected opening to reach a stair~~.

TABLE 1014.1

SPACES WITH ONE MEANS OF EGRESS

OCCUPANCY	MAXIMUM OCCUPANT LOAD
A, B, E[a], F, M, U	~~50~~ 49
H-1, H-2, H-3	3
H-4, H-5, I-1, I-3, I-4, R	10

S	~~30~~ 29

a. Day care maximum occupant load of 10.

1014.1.1 Three or more exits. Access to three or more exits shall be provided from a floor ~~area~~ or space where required by Section 1018.1.

1014.2.1 Two exits or exit access doorways. Where two exits or exit access doorways are required from any portion of the exit access, the exit doors or exit access doorways shall be placed a distance apart equal to not less than one-half of the length of the maximum overall diagonal dimension of the building or area to be served measured in a straight line between exit doors or exit access doorways. Interlocking or scissor stairs shall be counted as one exit stairway.

Exceptions:

1. Where exits ~~enclosures are provided as a portion of the required exit and~~ are interconnected by a 1-hour fire-resistance-rated corridor conforming to the requirements of Section 1016, the required exit separation ~~shall~~ may be measured along the shortest direct line of travel within the corridor.

2. Where a building is equipped throughout with an automatic sprinkler system in accordance with Section 903.3.1.1 or 903.3.1.2, the separation distance of the exit doors or exit access doorways shall not be less than one-third of the length of the maximum overall diagonal dimension of the area served.

1014.2.2 Three or more exits or exit access doorways. Where access to three or more exits is required, at least two exit doors or exit access doorways shall be arranged in accordance with the provisions of Section 1014.2.1. ~~placed a distance apart equal to not less than one-half of the length of the maximum overall diagonal dimension of the area served measured in a straight line between such exit doors or exit access doorways. Additional exits or exit access doorways shall be arranged a reasonable distance apart so that if one becomes blocked, the others will be available.~~

~~**Exception:** Where a building is equipped throughout with an automatic sprinkler system in accordance with Section 903.3.1.1 or 903.3.1.2, the separation distance of at least two of the exit doors or exit access doorways shall not be less than one-third of the length of the maximum overall diagonal dimension of the area served~~.

1014.3 Boiler, incinerator and furnace rooms. Two exit access doorways are required in boiler, incinerator and furnace rooms where the area is over 500 square feet (46 m^2) and any fuel-fired equipment exceeds 400,000 British thermal units (Btu) (422 000 KJ) input capacity. Where two exit access doorways are required, one is permitted to be a fixed ladder or an alternating tread device. Exit access doorways shall be separated by a horizontal distance equal to one-half the ~~maximum horizontal~~ length of the maximum overall diagonal dimension of the room.

TABLE 1015.1

EXIT ACCESS TRAVEL DISTANCE[a]

OCCUPANCY	WITHOUT SPRINKLER SYSTEM (feet)	WITH SPRINKLER SYSTEM (feet)
A, E, ~~F-1,~~ I-1, M, R~~, S-1~~	200	250[b]
F-1, S-1	200	400
F-2, S-2, U	300	400 ~~[b]~~[c]

Note: Portions of the table not shown remain unchanged.

1015.2 ~~**Roof vent increase.** In buildings which are one story in height, equipped with automatic heat and smoke roof vents complying with Section 910 and equipped throughout with an automatic sprinkler system in accordance with Section 903.3.1.1, the maximum exit access travel distance shall be 400 feet (122 m) for occupancies in Group F-1 or S-1.~~

~~**1015.3**~~ **Exterior egress balcony increase.** Travel distances specified in Section 1015.1 shall be increased up to an additional 100 feet (30 480 mm) provided the last portion of the exit access leading to the exit occurs on an exterior egress balcony constructed in accordance with Section 1013.5. The length of such balcony shall not be less than the amount of the increase taken.

1016.1 Construction. Corridors shall be fire-resistance rated in accordance with Table 1016.1. The corridor walls required to be fire-resistance rated shall comply with Section 708 for fire partitions.

Exceptions:

1. A fire-resistance rating is not required for corridors in an occupancy in Group E where each room that is used for instruction has at least one door directly to the exterior and rooms for assembly purposes have at least one-half of the required means of egress doors opening directly to the exterior. Exterior doors specified in this exception are required to be at ground level.

2. A fire-resistance rating is not required for corridors contained within a dwelling or sleeping unit in an occupancy in Group R.

3. A fire-resistance rating is not required for corridors in open parking garages.

4. A fire-resistance rating is not required for corridors in an occupancy in Group B which is a space requiring only a single means of egress complying with Section 1014.1.

5. A fire-resistance rating is not required for corridors in one-story buildings housing Groups B, F, M, and S occupancies.

6. A fire-resistance rating is not required for corridors 30 feet (9144 mm) or more in width.

7. In other than Type I or II construction, exterior exit balcony roof assemblies may be of heavy timber construction without concealed spaces.

8. In Groups B, F, M and S occupancies where exits are available from an open floor area.

9. In Groups B, F, M and S occupancies within a single tenant suite or space, corridors need not be separated.

10. In Groups B, F, M and S occupancies where one-hour fire-resistant corridors are required, walls shall be permitted to terminate at a noncombustible ceiling.

TABLE 1016.1

CORRIDOR FIRE-RESISTANCE RATING

OCCUPANCY	OCCUPANT LOAD SERVED BY CORRIDOR	REQUIRED FIRE-RESISTANCE RATING (hours)	
		Without sprinkler system	With sprinkler system[c]
H-1, H-2, H-3	All	Not Permitted	1
H-4, H-5	Greater than 30	Not Permitted	1
A, B, E, F, M, S, U	Greater than 30	1	0
R	Greater than 10	Not Permitted	~~0.5~~ 1
I-2[a], I-4	All	Not Permitted	0
I-1, I-3	All	Not Permitted	1[b]

a. For requirements for occupancies in Group I-2, see Section 407.3.

b. For a reduction in the fire-resistance rating for occupancies in Group I-3, see Section 408.7.

c. Buildings or fire areas equipped throughout with an automatic sprinkler system in accordance with Section 903.3.1.1 or 903.3.1.2 where allowed.

1016.2 Corridor width. The minimum corridor width shall be as determined in Section 1005.1, but not less than 44 inches (1118 mm).

Exceptions:

1. Twenty-four inches (610 mm)—For access to and utilization of electrical, mechanical or plumbing systems or equipment.

2. Thirty-six inches (914 mm)—With a required occupant capacity of less than 50 ~~or less~~.

3. Thirty-six inches (914 mm)—Within a dwelling unit.

4. Seventy-two inches (1829 mm)—In Group E with a corridor having a required capacity of 100 or more.

5. Seventy-two inches (1829 mm)—In corridors serving surgical Group I, health care centers for ambulatory patients receiving outpatient medical care, which causes the patient to be not capable of self-preservation.

6. Ninety-six inches (2438 mm)—In Group I-2 in areas where required for bed movement.

1016.3 Dead ends. Where more than one exit or exit access doorway is required, the exit access shall be arranged such that there are no dead ends in corridors more than 20 feet (6096 mm) in length.

Exceptions:

1. In occupancies in Group I-3 of Occupancy Condition 2, 3 or 4 (see Section 308.4), the dead end in a corridor shall not exceed 50 feet (15 240 mm).

2. In occupancies in Groups B, ~~and~~ F, M and S where the building is equipped throughout with an automatic sprinkler system in accordance with Section 903.3.1.1, the length of dead-end corridors shall not exceed 50 feet (15 240 mm).

3. A dead-end corridor shall not be limited in length where the length of the dead-end corridor is less than 2.5 times the least width of the dead-end corridor.

1016.4 Air movement in corridors. ~~Exit access c~~ Corridors shall not serve as supply, return, exhaust, relief or ventilation air ducts or plenums.

Exceptions:

1. Use of a corridor as a source of makeup air for exhaust systems in rooms that open directly onto such corridors, including toilet rooms, sleeping units, dormitory rooms, bathrooms, dressing rooms, smoking lounges and janitor closets, shall be permitted provided that each such corridor is directly supplied with outdoor air at a rate greater than the rate of makeup air taken from the corridor.

2. Where located within a dwelling unit, the use of corridors for conveying return air shall not be prohibited.

3. Where located within tenant spaces of 1,000 square feet (93 m^2) or less in area, utilization of corridors for conveying return air is permitted.

4. Air induced from the corridor into rooms required to be maintained under negative pressure with respect to the corridor by this code, other regulatory authorities, or standards, shall be limited to the quantity required to maintain the required room pressure.

5. Air leakage into the corridor from rooms required to be maintained under positive pressure with respect to the corridor by this code, other regulatory authorities, or standards, shall be limited to the quantity required to maintain the required room pressure.

1016.5 Corridor continuity. Fire-resistance-rated corridors shall be continuous from the point of entry to an exit, and shall not be interrupted by intervening rooms.

Exception: Foyers, lobbies, restrooms or reception rooms constructed as required for corridors shall not be construed as intervening rooms.

1018.1 Minimum number of exits. All rooms and spaces within each story shall be provided with and have access to the minimum number of approved independent exits as required by Table 1018.1 based on the occupant load of the story, except as modified in Section 1014.1 or 1018.2. For the purposes of this chapter, occupied roofs shall be provided with exits as required for stories. The required number of exits from any story, basement or individual space shall be maintained until arrival at grade or the public way.

TABLE 1018.1

MINIMUM NUMBER OF EXITS FOR OCCUPANT LOAD

OCCUPANT LOAD (persons per story)	MINIMUM NUMBER OF EXITS (per story)
1-500	2
501-1000	3
More than 1,000	4

1018.1.1 ~~Open p~~ Parking structures. Parking structures shall not have less than two exits from each parking tier, except that only one exit is required where vehicles are mechanically parked. ~~Unenclosed v~~ Vehicle ramps shall not be considered as required exits unless pedestrian facilities are provided.

TABLE 1018.2

BUILDINGS WITH ONE EXIT

OCCUPANCY	MAXIMUM HEIGHT OF BUILDING ABOVE GRADE PLANE	MAXIMUM OCCUPANTS (OR DWELLING UNITS) PER FLOOR AND TRAVEL DISTANCE
A, B[d], E[e], F, M, U	1 Story	~~50~~ 49 occupants and 75 feet travel distance
H-2, H-3	1 Story	3 occupants and 25 feet travel distance

H-4, H-5, I, R	1 Story	10 occupants and 75 feet travel distance
S[a]	1 Story	~~30~~ 29 occupants and 100 feet travel distance
B[b], F, M, S[a]	2 Stories	30 occupants and 75 feet travel distance
R-2	2 Stories	4 dwelling units and 50 feet travel distance

For SI: 1 foot = 304.8 mm

a. For the required number of exits for open parking structures, see Section 1018.1.1.
b. For the required number of exits for air traffic control towers, see Section 412.1.
c. Buildings classified as Group R-2 equipped throughout with an automatic sprinkler system in accordance with Section 903.3.1.1 or 903.3.1.2 and provided with emergency escape and rescue openings in accordance with Section 1025 shall have a maximum height of three stories above grade plane.
d. Buildings equipped throughout with an automatic sprinkler system in accordance with Section 903.3.1.1 with an occupancy in Group B shall have a maximum travel distance of 100 feet.
e. Day care maximum occupant load 10.

1019.1 Enclosures required. Interior exit stairways and interior exit ramps shall be enclosed with fire barriersconstructed in accordance with Section 706. Exit enclosures shall have a fire-resistance rating of not less than 2 hours where connecting four stories or more and not less than 1 hour where connecting less than four stories. The number of stories connected by the shaft enclosure shall include any basements but not any mezzanines. An exit enclosure shall not be used for any purpose other than means of egress. ~~Enclosures shall be constructed as fire barriers in accordance with Section 706~~.

Exceptions:

1. In other than Group H and I occupancies, ~~a stairway serving an occupant load of less than 10 not more than one story above the level of exit discharge is not required to be enclosed~~ an exit enclosure need not be provided for a stairway, ramp, or escalator serving only one adjacent floor. Any two such atmospherically interconnected floors shall not communicate with other floors.

2. Exits in buildings of Group A-5 where all portions of the means of egress are essentially open to the outside need not be enclosed.

3. Stairways serving and contained within a single residential dwelling unit or sleeping unit in occupancies in Group R-1, R-2 or R-3 ~~and sleeping units in occupancies in Group R-1~~ are not required to be enclosed.

4. Stairways that are not a required means of egress element are not required to be enclosed where such stairways comply with Section 707.2.

5. Stairways in open parking structures which serve only the parking structure are not required to be enclosed.

6. Stairways in occupancies in Group I-3 as provided for in Section 408.3.6 are not required to be enclosed.

7. Means of egress stairways as required by Section 410.5.4 are not required to be enclosed.

8. In other than occupancy Groups H and I, a maximum of 50 percent of egress stairways serving one adjacent floor are not required to be enclosed, provided at least two means of egress are provided from both floors served by the unenclosed stairways. Any two such interconnected floors shall not be open to other floors.

~~9. In other than occupancy Groups H and I, interior egress stairways serving only the first and second stories of a building equipped throughout with an automatic sprinkler system in accordance with Section 903.3.1.1 are not required to be enclosed, provided at least two means of egress are provided from both floors served by the unenclosed stairways. Such interconnected stories shall not be open to other stories~~.

1019.1.3 Ventilation. Equipment and ductwork for exit enclosure ventilation shall comply with one of the following items:

1. Such equipment and ductwork shall be located exterior to the building and shall be directly connected to the exit enclosure by ductwork enclosed in construction as required for shafts.

2. Where such equipment and ductwork is located within the exit enclosure, the intake air shall be taken directly from the outdoors and the exhaust air shall be discharged directly to the outdoors, or such air shall be conveyed through ducts enclosed in construction as required for shafts.

3. Where located within the building, such equipment and ductwork shall be separated from the remainder of the building, including other mechanical equipment, with construction as required for shafts.

In each case, openings into the fire-resistance-rated construction shall be limited to those needed for maintenance and operation and shall be protected by ~~self-closing fire-resistance- rated devices in accordance with Chapter 7 for enclosure wall~~ opening protectives in accordance with Section 715 for shaft enclosures.

Exit enclosure ventilation systems shall be independent of other building ventilation systems.

1019.1.4 ~~Vertical~~ Exit enclosure exterior walls. Exterior walls of an ~~vertical~~ exit enclosure shall comply with the requirements of Section 704 for exterior walls. Where nonrated walls or unprotected openings enclose the exterior of the stairway and the walls or openings are exposed by other parts of the building at an angle of less than 180 degrees (3.14 rad), the building exterior walls within 10 feet (3048 mm) horizontally of a nonrated wall or unprotected opening shall ≥~~be constructed as required for a minimum 1-hour~~ have a fire-resistance rating ~~with 3/4- hour opening protectives~~ of not less than 1 hour. Openings within such exterior walls shall be protected by

opening protectives having a fire protection rating of not less than 3/4 hour. This construction shall extend vertically from the ground to a point 10 feet (3048 mm) above the topmost landing of the stairway or to the roof line, whichever is lower.

1019.1.5 Reserved. ~~**Enclosures under stairways.** The walls and soffits within enclosed usable spaces under enclosed and unenclosed stairways shall be protected by 1-hour fire-resistance-rated construction, or the fire- resistance rating of the stairway enclosure, whichever is greater. Access to the enclosed usable space shall not be directly from within the stair enclosure.~~

> ~~**Exception:** Spaces under stairways serving and contained within a single residential dwelling unit in Group R-2 or R-3 as applicable in Section 101.2. There shall be no enclosed usable space under exterior exit stairways unless the space is completely enclosed in 1-hour fire-resistance-rated construction. The open space under exterior stairways shall not be used for any purpose.~~

1019.1.7 Stairway identification. ~~**Stairway floor number signs.** A sign shall be provided at each floor landing in interior vertical exit enclosures connecting more than three stories designating the floor level, the terminus of the top and bottom of the stair enclosure and the identification of the stair. The signage shall also state the story of, and the direction to the exit discharge and the availability of roof access from the stairway for the fire department. The sign shall be located 5 feet (1524 mm) above the floor landing in a position which is readily visible when the doors are in the open and closed positions~~. Stairway identification signs shall be located at each floor level in all enclosed stairways in buildings four or more stories in height. Such signs shall identify the stairway, indicate whether or not there is roof access, the floor level, and the upper and lower terminus of the stairway. The sign shall be located approximately 5 feet (1524 mm) above the landing floor in a position that is readily visible when the door is in either the open or closed position. Signs shall comply with the requirements of the *Fire Code*, Appendix H. For stairway reentry requirements see Section 403.

In addition to the signs required above, approved stairway identification signs shall be located at each floor level on the occupancy side of each enclosed stairway. Identification signs shall be posted on or adjacent to the door with lettering at least 2 inches in height on a background of contrasting color so that the lettering is clearly visible.

Where stair doors can be locked to prohibit reentry to a floor, an approved sign shall be posted that reads “NO REENTRY” with lettering not less than 1 inch in height on a background of contrasting color so that the lettering is clearly visible.

1019.1.8 Smokeproof enclosures. In buildings required to comply with Section 403 or 405, each of the exits of a building that serves stories where the floor surface is located more than 75 feet (22 860 mm) above ~~the lowest level of fire department vehicle access~~ grade plane or more than 30 feet (9144 mm) below the level of exit discharge serving such floor levels shall be a smokeproof enclosure or pressurized stairway in accordance with Section 909.20.

> **1019.1.8.1 Enclosure exit.** A smokeproof enclosure or pressurized stairway shall exit into a public way or into an exit passageway, yard or open space having direct access to a public way. The exit passageway shall be without other openings and shall be separated from the remainder of the building by 2-hour fire-resistance- rated construction.

Exceptions:

1. Openings in the exit passageway serving a smokeproof enclosure are permitted where the exit passageway is protected and pressurized in the same manner as the smokeproof enclosure, and openings are protected as required for access from other floors.

2. Openings in the exit passageway serving a pressurized stairway are permitted where the exit passageway is protected and pressurized in the same manner as the pressurized stairway.

3. A smokeproof enclosure or pressurized stairway is permitted to egress in accordance with Section 1023.

1021.3 Opening protectives. Fire doors in horizontal exits shall be self-closing or automatic-closing when activated by a smoke detector installed in accordance with Section 907.10. ~~Opening protectives in horizontal exits shall be consistent with the fire-resistance rating of the wall.~~ Such doors where located in a cross-corridor condition shall be automatic-closing by activation of a smoke detector installed in accordance with Section 907.10.

1022.2 Reserved. ~~**Use in a means of egress.** Exterior exit ramps and stairways shall not be used as an element of a required means of egress for occupancies in Group I-2. For occupancies in other than Group I-2, exterior exit ramps and stairways shall be permitted as an element of a required means of egress for buildings not exceeding six stories or 75 feet (22 860 mm) in height.~~

1022.6 Exterior ramps and stairway protection. Exterior exit ramps and stairways shall be separated from the interior of the building as required in Section 1019.1. Openings shall be limited to those necessary for egress from normally occupied spaces.

Exceptions:

1. Separation from the interior of the building is not required for occupancies, other than those in Group R-1 or R-2, in buildings that are no more than two stories above grade plane where the level of exit discharge is the first story above grade plane.

2. Separation from the interior of the building is not required where the exterior ramp or stairway is served by an exterior ramp and/or balcony that connects two remote exterior stairways or other approved exits, with a perimeter that is not less than 50 percent open. To be considered open, the opening shall be a minimum of 50 percent of the height of the enclosing wall, with the top of the openings no less than 7 feet (2134 mm) above the top of the balcony.

3. Separation from the interior of the building is not required for an exterior ramp or stairway located in a building or structure that is permitted to have unenclosed interior stairways in accordance with Section 1019.1.

4. Separation from the interior of the building is not required for exterior ramps or stairways connected to open-ended corridors, provided that Items 4.1 through 4.4 are met:

4.1. The building, including corridors and ramps and/or stairs, shall be equipped throughout with an automatic sprinkler system in accordance with Section 903.3.1.1 or 903.3.1.2.

4.2. The open-ended corridors comply with Section 1016.

4.3. The open-ended corridors are connected on each end to an exterior exit ramp or stairway complying with Section 1022.

4.4. At any location in an open-ended corridor where a change of direction exceeding 45 degrees (0.79 rad) occurs, a clear opening of not less than 35 square feet (3.3 m^2) or an exterior ramp or stairway shall be provided. Where clear openings are provided, they shall be located so as to minimize the accumulation of smoke or toxic gases.

1024.2 Assembly main exit. Group A occupancies that have an occupant load of greater than 300 shall be provided with a main exit. The main exit shall be of sufficient width to accommodate not less than one-half of the occupant load, but such width shall not be less than the total required width of all means of egress leading to the exit. Where the ~~building~~ assembly area is classified as a Group A occupancy, the main exit shall front on at least one street or an unoccupied space of not less than 10 feet (3048 mm) in width that adjoins a street or public way.

Exception: In assembly occupancies where there is no well-defined main exit or where multiple main exits are provided, exits shall be permitted to be distributed around the perimeter of the ~~building~~ assembly area provided that the total width of egress is not less than 100 percent of the required width.

1024.3 Assembly other exits. In addition to having access to a main exit, each level of an occupancy in Group A having an occupant load of greater than 300 shall be provided with additional ~~exits~~ means of egress that shall provide an egress capacity for at least one-half of the total occupant load served by that level and comply with Section 1014.2.

Exception: In assembly occupancies where there is no well-defined main exit or where multiple main exits are provided, exits shall be permitted to be distributed around the perimeter of the ~~building~~ assembly area provided that the total width of egress is not less than 100 percent of the required width.

1024.5 Interior balcony and gallery means of egress. For balconies or galleries having a seating capacity of ~~over~~ 50 or more located in Group A occupancies, at least two means of egress shall be provided, one from each side of every balcony or gallery, with at least one leading directly to an exit.

1024.5.1 Enclosure of balcony openings. Interior stairways and other vertical openings shall be enclosed in an ~~vertical~~ exit enclosure as provided in Section 1019.1, except that stairways are permitted to be open between the balcony and the main assembly floor in occupancies such as theaters, churches and auditoriums. At least one accessible means of egress is required from a balcony or gallery level containing accessible seating locations in accordance with Section 1007.3 or 1007.4.

1024.6.2 Smoke-protected seating. The clear width of the means of egress for smoke-protected assembly seating shall be not less than the occupant load served by the egress element multiplied by the appropriate factor in Table 1024.6.2. The total number of seats specified shall be those within ~~a single assembly~~ the space ~~and~~ exposed to the same smoke-protected environment. Interpolation is permitted between the specific values shown. A life safety evaluation, complying with NFPA 101, shall be done for a facility utilizing the reduced width requirements of Table 1024.6.2 for smoke-protected assembly seating.

Exception: For an outdoor smoke-protected assembly with an occupant load not greater than 18,000, the clear width shall be determined using the factors in Section 1024.6.3.

1024.8 Common path of travel. The common path of travel shall not exceed 30 feet (9144 mm) from any seat to a point where a person has a choice of two paths of egress travel to two exits.

Exceptions:

1. For areas serving ~~not more~~ less than 50 occupants, the common path of travel shall not exceed 75 feet (22 860 mm).

2. For smoke-protected assembly seating, the common path of travel shall not exceed 50 feet (15 240 mm).

1024.9.1 Minimum aisle width. The minimum clear width of aisles shall be as shown:

1. Forty-eight inches (1219 mm) for aisle stairs having seating on each side.

   Exception: Thirty-six inches (914 mm) where the aisle ~~does not serve more~~ serves less than 50 seats.

2. Thirty-six inches (914 mm) for aisle stairs having seating on only one side.

3. Twenty-three inches (584 mm) between an aisle stair handrail or guard and seating where the aisle is subdivided by a handrail.

4. Forty-two inches (1067 mm) for level or ramped aisles having seating on both sides.

Exceptions:

1. Thirty-six inches (914 mm) where the aisle ~~does not serve more~~ serves less than 50 seats.

2. Thirty inches (762 mm) where the aisle does not serve more than 14 seats.

5. Thirty-six inches (914 mm) for level or ramped aisles having seating on only one side.

Exceptions:

1. Thirty inches (762 mm) where the aisle does not serve more than 14 seats.

~~6.~~2. Twenty-three inches (584 mm) between an aisle stair handrail and seating where an aisle does not serve more than five rows on one side.

1024.10.3 Common path of travel. The common path of travel shall not exceed 30 feet (9144 mm) from any seat to a point where a person has a choice of two paths of egress travel to two exits.

Exceptions:

1. For area serving not more than 50 occupants, the common path of travel shall not exceed 75 feet (22 860 mm).
2. For smoke-protected assembly seating, the common path of travel shall not exceed 50 feet (15 240 mm).

1024.10.3.1 Path through adjacent row. Where one of the two paths of travel is across the aisle through a row of seats to another aisle, there shall be no more than 24 seats between the two aisles, and the clear width between rows for the row between the two aisles shall be 12 inches (305 mm) plus 0.6 inch (15.2 mm) for each additional seat in excess of seven in the row between aisles.

1024.12 Reserved. ~~**Seat stability.** In places of assembly, the seats shall be securely fastened to the floor.~~

~~**Exceptions:**~~

~~1. In places of assembly or portions thereof without ramped or tiered floors for seating and with 200 or fewer seats, the seats shall not be required to be fastened to the floor.~~

~~2. In places of assembly or portions thereof with seating at tables and without ramped or tiered floors for seating, the seats shall not be required to be fastened to the floor.~~

~~3. In places of assembly or portions thereof without ramped or tiered floors for seating and with greater than 200 seats, the seats shall be fastened together in groups of not less than three or the seats shall be securely fastened to the floor.~~

~~4. In places of assembly where flexibility of the seating arrangement is an integral part of the design and function of the space and seating is on tiered levels, a maximum of 200 seats shall not be required to be fastened to the floor. Plans showing seating, tiers and aisles shall be submitted for approval.~~

~~5. Groups of seats within a place of assembly separated from other seating by railings, guards, partial height walls or similar barriers with level floors and having no more than 14 seats per group shall not be required to be fastened to the floor.~~

~~6. Seats intended for musicians or other performers and separated by railings, guards, partial height walls or similar barriers shall not be required to be fastened to the floor~~.

1025.1 General. In addition to the means of egress required by this chapter, provisions shall be made for emergency escape and rescue in Group R as applicable in Section 101.2 and Group I-1 occupancies. Basements and sleeping rooms below the fourth story above grade plane shall have at least one exterior emergency escape and rescue opening in accordance with this section. Where basements contain one or more sleeping rooms, emergency egress and rescue openings shall be required in each sleeping room, but shall not be required in adjoining areas of the basement. Such opening shall open directly into a public way ~~street, public alley~~, or to a yard or court that opens to a public way.

Exceptions:

1. ~~In other than Group R-3 occupancies as applicable in Section 101.2, b~~ Buildings equipped throughout with an approved automatic sprinkler system in accordance with Section 903.3.1.1 or 903.3.1.2.

2. ~~In other than Group R-3 occupancies as applicable in Section 101.2, s~~ Sleeping rooms provided with a door to a fire-resistance-rated corridor having access to two remote exits in opposite directions.

3. The emergency escape and rescue opening is permitted to open onto a balcony within an atrium in accordance with the requirements of Section 404, provided the balcony provides access to an exit and the dwelling unit or sleeping unit has a means of egress that is not open to the atrium.

4. Basements with a ceiling height of less than 80 inches (2032 mm) shall not be required to have emergency escape and rescue windows.

5. High-rise buildings in accordance with Section 403.

6. Emergency escape and rescue openings are not required from basements or sleeping rooms which have an exit door or exit access door that opens directly into a public ~~street, public alley~~ way, or to a yard, ~~egress~~ court or ~~to an~~ exterior exit balcony that opens to a public way ~~street, public alley, yard or egress court~~.

7. Basements without habitable spaces and having no more than 200 square feet (18.6 square meters) in floor area shall not be required to have emergency escape windows.

1025.2 Minimum size. Emergency escape and rescue openings shall have a minimum net clear opening of 5.7 square feet (0.53 m^2).

Exception: The minimum net clear opening for emergency escape and rescue at grade-floor ~~openings~~ shall be 5 square feet (0.46 m^2).

DELETE CHAPTER 11 IN ITS ENTIRETY AND INSERT THE FOLLOWING:

CHAPTER 11
ACCESSIBILITY

SECTION 1101
GENERAL

1101.1 State law. Accessibility issues for certain publicly and privately owned buildings and facilities are governed by state law and regulations, including Chapter 469 of the Texas Government Code and various regulations, standards and specifications issued thereunder.

1102.1 Responsibility of owners. It is the responsibility of the owner to ensure compliance with state and federal requirements. As provided by Section 469.102 of the Texas Government Code, the applicant for a building permit for an affected building or facility shall provide evidence of registration with the Texas Department of Licensing and Regulation as a part of the building permit application.

1101.3 Jurisdiction is not an agent of the state. This jurisdiction has not contracted with the state and is not authorized to review plans, grant waivers or modifications, perform inspections, or take any other action with respect to compliance with state or federal accessibility requirements. No action taken by this jurisdiction or the building official shall be deemed as excusing compliance with state or federal requirements.

CHAPTER 12
INTERIOR ENVIRONMENT

1203.3.2 Exceptions. The following are exceptions to Sections 1203.3 and 1203.3.1:

1. Where warranted by climatic conditions, ventilation openings to the outdoors are not required if ventilation openings to the interior are provided.
2. The total area of ventilation openings is permitted to be reduced to 1/1,500 of the under-floor area where the ground surface is treated with an approved vapor retarder material and the required openings are placed so as to provide cross ventilation of the space. The installation of operable louvers shall not be prohibited.
3. Ventilation openings are not required where continuously operated mechanical ventilation is provided at a rate of 1.0 cubic foot per minute (cfm) for each 50 square feet (1.02 L/s for each 10 m^2) of crawl-space floor area and the ground surface is covered with an approved vapor retarder.
4. Ventilation openings are not required when the ground surface is covered with an approved vapor retarder, the perimeter walls are insulated and the space is conditioned in accordance with the *International Energy Conservation Code*.
5. ~~For buildings in flood hazard areas as established in Section 1612.3, the openings for under-floor ventilation shall be deemed as meeting the flood opening requirements of ASCE 24 provided that the ventilation openings are designed and installed in accordance with ASCE 24.~~

1203.4.2 DELETE AND RESERVE.

1203.4.2.1 — DELETE IN ITS ENTIRETY.

1204.1 Equipment and systems. Interior spaces ~~intended for human occupancy~~ of Groups R and I shall be provided with active or passive space-heating systems capable of maintaining a minimum indoor temperature of 68° F (20° C) at a point 3 feet (914 mm) above the floor on the design heating day.

~~**Exception:** Interior spaces where the primary purpose is not associated with human comfort.~~

SECTION 1207
DELETE AND RESERVE ENTIRE SECTION

1208.2 Minimum ceiling heights. ~~Occupiable spaces, h~~ Habitable spaces and corridors shall have a ceiling height of not less than 7 feet 6 inches (2286 mm). Bathrooms, toilet rooms, kitchens, storage rooms and laundry rooms shall be permitted to have a ceiling height of not less than 7 feet (2134 mm).

Exceptions:

1. In one- and two-family dwellings, beams or girders spaced not less than 4 feet (1219 mm) on center and projecting not more than 6 inches (152 mm) below the required ceiling height.
2. If any room in a building has a sloped ceiling, the prescribed ceiling height for the room is required in one-half the area thereof. Any portion of the room measuring less than 5 feet (1524 mm) from the finished floor to the ceiling shall not be included in any computation of the minimum area thereof.
3. Mezzanines constructed in accordance with Section 505.1.

1209.2 Attic spaces. An opening not less than 20 inches by 30 inches (559 mm by 762 mm) shall be provided to any attic area having a clear height of over 30 inches (762 mm). A 30-inch (762 mm) minimum clear headroom in the attic space shall be provided at or above the access opening. When the opening is located in a one hour rated assembly the opening shall be 5/8" Type X gypsum or permitted to be constructed as in Section 406.1.4 for attic disappearing stairs.

CHAPTER 14
EXTERIOR WALLS

***1402.1 General.** The following words and terms shall, for the purposes of this chapter and as used elsewhere in this code, have the meanings shown herein.

VINYL SIDING. A shaped material, made principally from rigid poly (vinyl chloride) (PVC), that is used as an exterior wall covering.

***NOTE: ALL OTHER PORTIONS OF THIS SECTION 1402.1 TO REMAIN AS SET FORTH IN THE 2003 INTERNATIONAL BUILDING CODE.**

1403.2 Weather protection. Exterior walls shall provide the building with a weather-resistant exterior wall envelope. The exterior wall envelope shall include flashing, as described in Section 1405.3. The exterior wall envelope shall be designed and constructed in such a manner as to prevent the accumulation of water within the wall assembly by providing a water-resistive barrier behind the exterior veneer, as described in Section 1404.2 and a means for draining water that enters the assembly to the exterior ~~of the veneer, unless it is determined that penetration of water behind the veneer shall not be detrimental to the building performance~~. Protection against condensation in the exterior wall assembly shall be provided in accordance with the *International Energy Conservation Code*.

Exceptions:

1. A weather-resistant exterior wall envelope shall not be required over concrete or masonry walls designed in accordance with Chapters 19 and 21, respectively.
2. Compliance with the requirements for a means of drainage, and the requirements of Sections 1405.2 and 1405.3, shall not be required for an exterior wall envelope that has been demonstrated through testing to resist wind-driven rain, including joints, penetrations and intersections with dissimilar materials, in accordance with ASTM E 331 under the following conditions:
   - 2.1. Exterior wall envelope test assemblies shall include at least one opening, one control joint, one wall/eave interface and one wall sill. All tested openings and penetrations shall be representative of the intended end-use configuration.
   - 2.2. Exterior wall envelope test assemblies shall be at least 4 feet by 8 feet (1219 mm by 2438 mm) in size.
   - 2.3. Exterior wall envelope assemblies shall be tested at a minimum differential pressure of 6.24 pounds per square foot (psf) (0.297 kN/m^2).
   - 2.4. Exterior wall envelope assemblies shall be subjected to a minimum test exposure duration of 2 hours.

The exterior wall envelope design shall be considered to resist wind-driven rain where the results of testing indicate that water did not penetrate control joints in the exterior wall envelope, joints at the perimeter of openings or intersections of terminations with dissimilar materials.

1403.3 DELETE AND RESERVE.

1403.6 — DELETE IN ITS ENTIRETY.
1403.7 — DELETE IN ITS ENTIRETY.

1404.2 Water-resistive barrier. A minimum of one layer of No. 15 asphalt felt, complying with ASTM D 226 for Type 1 felt, or other approved materials shall be attached to the studs or sheathing, with flashing as described in Section 1405.3, in such a manner as to provide a continuous water-resistive barrier behind the exterior wall veneer.

1404.5.2 Cold rolled copper. Copper shall conform to the requirements of ASTM B 370.
1404.5.3 Lead coated copper. Lead coated copper shall conform to the requirements of ASTM B 101.

1405.4 Wood veneers. Wood veneers on exterior walls of buildings of Type I, II, III and IV construction shall be not less than 1-inch (25 mm) nominal thickness, 0.438-inch (11.1 mm) exterior hardboard siding or 0.375-inch (9.5 mm) exterior-type wood structural panels or particleboard and shall conform to the following:

1. The veneer ~~does~~ shall not exceed three stories in height, measured from the grade plane~~, except w~~Where fire-retardant-treated wood is used, the height shall not exceed four stories.
2. The veneer is attached to or furred from a noncombustible backing that is fire-resistance rated as required by other provisions of this code.
3. Where open or spaced wood veneers (without concealed spaces) are used, they shall not project more than 24 inches (610 mm) from the building wall.

1406.2.1.1 — DELETE IN ITS ENTIRETY.
1406.2.1.2 — DELETE IN ITS ENTIRETY.

TABLE 1406.2.1.2 — DELETE IN ITS ENTIRETY

1406.2.4 Fireblocking. Where the combustible exterior wall covering is furred from the wall and forms a solid surface, the distance between the back of the covering and the wall shall not exceed 1.625 inches (41 mm) and the space thereby created shall be fireblocked in accordance with Section 717. ~~so that there will be no open space exceeding 100 square feet (9.3 m^2). Where wood furring strips are used, they shall be of approved wood of natural decay resistance or preservative-treated wood.~~

~~**Exceptions:**~~

~~1. Fireblocking of cornices is not required in single-family dwellings.~~
~~2. Fireblocking shall not be required where installed on noncombustible framing and the face of the exterior wall finish exposed to the concealed space is covered by one of the following materials:~~
~~2.1. Aluminum having a minimum thickness of 0.019 inch (0.5 mm);~~
~~2.2. Corrosion-resistant steel having a base metal thickness not less than 0.016 inch (0.4 mm) at any point; or~~
~~2.3. Other approved noncombustible materials.~~

1407.1.1 Plastic core. The plastic core of the MCM shall not contain foam plastic insulation as defined in Section 2602.1.

CHAPTER 15

ROOF ASSEMBLIES AND ROOFTOP STRUCTURES

1504.3.2 Metal panel roof systems. Metal panel roof systems through fastened or standing seam shall be tested in accordance with UL 580 or ASTM E 1592.

> **Exception:** Metal roofs constructed of cold-formed steel, where the roof deck acts as the roof covering and provides both weather protection and support for structural loads, shall be permitted to be designed and tested in accordance with the applicable referenced structural design standard in Section 2209.1.

1504.7 Impact resistance. Roof coverings installed on low-slope roofs (roof slope < 2:12) in accordance with Section 1507 shall resist impact damage based on the results of tests conducted in accordance with ASTM D 3746, ASTM D 4272, CGSB 37-GP-52M or the Resistance to Foot Traffic Test (Section 5.5) of FM 4470.

1504.8 Gravel and crushed stone. Gravel or crushed stone shall not be used on the roof of a building.

TABLE 1505.1[a,b]
MINIMUM ROOF COVERING CLASSIFICATION FOR TYPES OF CONSTRUCTION

IA	IB	IIA	IIB	IIIA	IIIB	IV	VA	VB
B	B	B	C[c]	B	C[c]	B	B	C[c]

For SI: 1 foot = 304.8 mm, 1 square foot = 0.0929 m².

~~a. Unless otherwise required in accordance with the *International Urban Wildland Interface Code* or due to the location of the building within a fire district in accordance with Appendix D.~~

~~b. Nonclassified roof coverings shall be permitted on buildings of Group R-3, as applicable in Section 101.2 and Group U occupancies, where there is a minimum fire separation distance of 6 feet measured from the leading edge of the roof.~~

~~c. Buildings that are not more than two stories in height and having not more than 6,000 square feet of projected roof area and where there is a minimum 10 foot fire separation distance from the leading edge of the roof to a lot line on all sides of the building, except for street fronts or public ways, shall be permitted to have roofs of No. 1 cedar or redwood shakes and No. 1 shingles.~~

1507.2.3 Underlayment. Unless otherwise noted, required underlayment shall conform to ASTM D 226, Type I, ~~or~~ ASTM D 4869, Type I, or ASTM D6757.

1507.2.7 Attachment. Asphalt shingles shall have the minimum number of fasteners required by the manufacturer and Section 1504.1. Asphalt shingles shall be secured to the roof with not less than four fasteners per strip shingle or two fasteners per individual shingle. Where the roof slope exceeds 20 units vertical in 12 units horizontal (166-percent slope), special methods of fastening are required. For roofs located where the basic wind speed in accordance with Figure 1609 is 110 mph (49 m/s) or greater, special methods of fastening are required. Special fastening methods shall be tested in accordance with ASTM D 3161, Class F ~~modified to use a wind speed of 110 mph~~. In these areas, asphalt shingle wrappers shall bear a label indicating compliance with ASTM D3161, Class F.

1507.2.8 Underlayment application. For roof slopes from two units vertical in 12 units horizontal (17-percent slope), up to four units vertical in 12 units horizontal (33-percent slope), underlayment

shall be two layers applied in the following manner. Apply a minimum 19-inch-wide (483 mm) strip of underlayment felt parallel with and starting at the eaves, fastened sufficiently to hold in place. Starting at the eave, apply 36-inch-wide (914 mm) sheets of underlayment overlapping successive sheets 19 inches (483 mm) and fastened sufficiently to hold in place. Distortions in the underlayment shall not interfere with the ability of the shingles to seal. For roof slopes of four units vertical in 12 units horizontal (33-percent slope) or greater, underlayment shall be one layer applied in the following manner. Underlayment shall be applied shingle fashion, parallel to and starting from the eave and lapped 2 inches (51 mm), fastened ~~only as necessary to hold in place~~ sufficiently to hold in place. Distortions in the underlayment shall not interfere with the ability of the shingles to seal.

1510.7 Final inspection. A final inspection and approval shall be obtained from the building official when the reroofing is complete.

CHAPTER 16
STRUCTURAL DESIGN

***1602.1 Definitions.** The following words and terms shall, for the purposes of this chapter, have the meanings shown herein:

~~**BASE SHEAR.** Total design lateral force or shear at the base.~~

~~**BASIC SEISMIC-FORCE-RESISTING SYSTEMS.**~~

~~**Bearing wall system.** A structural system without a complete vertical load-carrying space frame. Bearing walls or bracing elements provide support for substantial vertical loads. Seismic lateral force resistance is provided by shear walls or braced frames.~~

~~**Building frame system.** A structural system with an essentially complete space frame providing support for vertical loads. Seismic lateral force resistance is provided by shear walls or braced frames.~~

~~**Dual system.** A structural system with an essentially complete space frame providing support for vertical loads. Seismic lateral force resistance is provided by a moment frame and shear walls or braced frames.~~

~~**Inverted pendulum system.** A structure with a large portion of its mass concentrated at the top; therefore, having essentially one degree of freedom in horizontal translation. Seismic lateral force resistance is provided by the columns acting as cantilevers.~~

~~**Moment-resisting frame system.** A structural system with an essentially complete space frame providing support for vertical loads. Seismic lateral force resistance is provided by moment frames.~~

~~**Shear wall-frame interactive system.** A structural system which uses combinations of shear walls and frames designed to resist seismic lateral forces in proportion to their rigidities, considering interaction between shear walls and frames on all levels. Support of vertical loads is provided by the same shear walls and frames.~~

~~**BOUNDARY MEMBERS.** Strengthened portions along shear wall and diaphragm edges (also called "boundary elements").~~

~~**Boundary element.** In light-frame construction, diaphragms and shear wall boundary members to which sheathing transfers forces. Boundary elements include chords and drag struts at diaphragm and shear wall perimeters, interior openings, discontinuities and reentrant corners.~~

~~**CANTILEVERED COLUMN SYSTEM.** A structural system relying on column elements that cantilever from a fixed base and have minimal rotational resistance capacity at the top with lateral forces applied essentially at the top and are used for lateral resistance.~~

~~**COLLECTOR ELEMENTS.** Members that serve to transfer forces between floor diaphragms and members of the lateral- force-resisting system.~~

~~**CONFINED REGION.** The portion of a reinforced concrete component in which the concrete is confined by closely spaced special transverse reinforcement restraining the concrete in directions perpendicular to the applied stress.~~

~~**DEFORMABILITY.** The ratio of the ultimate deformation to the limit deformation.~~

~~**High deformability element.** An element whose deformability is not less than 3.5 when subjected to four fully reversed cycles at the limit deformation.~~

~~**Limited deformability element.** An element that is neither a low deformability or a high deformability element.~~

~~**Low deformability element.** An element whose deformability is 1.5 or less.~~

~~**DEFORMATION.**~~

~~**Limit deformation.** Two times the initial deformation that occurs at a load equal to 40 percent of the maximum strength.~~

~~**Ultimate deformation.** The deformation at which failure occurs and which shall be deemed to occur if the sustainable load reduces to 80 percent or less of the maximum strength.~~

~~**ELEMENT.**~~

~~**Ductile element.** An element capable of sustaining large cyclic deformations beyond the attainment of its nominal strength without any significant loss of strength.~~

~~**Limited ductile element.** An element that is capable of sustaining moderate cyclic deformations beyond the attainment of nominal strength without significant loss of strength.~~

~~**Nonductile element.** An element having a mode of failure that results in an abrupt loss of resistance when the element is deformed beyond the deformation corresponding to the development of its nominal strength. Nonductile elements cannot reliably sustain significant deformation beyond that attained at their nominal strength.~~

~~**EQUIPMENT SUPPORT.** Those structural members or assemblies of members or manufactured elements, including braces, frames, lugs, snuggers, hangers or saddles, that transmit gravity load and operating load between the equipment and the structure.~~

FABRIC PARTITIONS. A partition consisting of a finished surface made of fabric, without a continuous rigid backing, that is directly attached to a framing system in which the vertical framing members are spaced greater than 4 feet (1.2 m) on centers.

~~**FLEXIBLE EQUIPMENT CONNECTIONS.** Those connections between equipment components that permit rotational and/or translational movement without degradation of performance.~~

~~**FRAME.**~~

~~**Braced frame.** An essentially vertical truss, or its equivalent, of the concentric or eccentric type that is provided in a building frame system or dual system to resist lateral forces.~~

~~**Concentrically braced frame (CBF).** A braced frame in which the members are subjected primarily to axial forces.~~

~~**Eccentrically braced frame (EBF).** A diagonally braced frame in which at least one end of each brace frames into a beam a short distance from a beam-column or from another diagonal brace.~~

~~**Ordinary concentrically braced frame (OCBF).** A steel concentrically braced frame in which members and connections are designed in accordance with the provisions of AISC Seismic without modification.~~

~~**Special concentrically braced frame (SCBF).** A steel or composite steel and concrete concentrically braced frame in which members and connections are designed for ductile behavior.~~

~~**Moment frame.** A frame in which members and joints resist lateral forces by flexure as well as along the axis of the members. Moment frames are categorized as "intermediate moment frames" (IMF), "ordinary moment frames" (OMF), and "special moment frames" (SMF).~~

~~**JOINT.** A portion of a column bounded by the highest and lowest surfaces of the other members framing into it.~~

NOTATIONS.

D = Dead load.

E = Combined effect of horizontal and vertical earthquake-induced forces as defined in Sections 1616.4.1 and 1617.1.

E_m = Maximum seismic load effect of horizontal and vertical seismic forces as set forth in Sections 1616.4.1 and 1617.1.

F = Load due to fluids with well-defined pressures and maximum heights.

F_a = Flood load.

H = Load due to lateral earth pressures, ground water pressure or pressure of bulk materials. ~~of soil and water in soil.~~

L = Live load, except roof live load, including any permitted live load reduction.

L_r = Roof live load including any permitted live load reduction.

~~*P* = Ponding load.~~

R = Rain load.

S = Snow load.

T = Self-straining force arising from contraction or expansion resulting from temperature change, shrinkage, moisture change, creep in component materials, movement due to differential settlement or combinations thereof.

W = Load due to windpressure.

~~**P-DELTA EFFECT.** The second order effect on shears, axial forces and moments of frame members induced by axial loads on a laterally displaced building frame.~~

~~**SHALLOW ANCHORS.** Shallow anchors are those with embedment length-to-diameter ratios of less than eight.~~

~~**SHEAR PANEL.** A floor, roof or wall component sheathed to act as a shear wall or diaphragm.~~

~~**SHEAR WALL.** A wall designed to resist lateral forces parallel to the plane of the wall.~~

~~**SPACE FRAME.** A structure composed of interconnected members, other than bearing walls, that is capable of supporting vertical loads and that also may provide resistance to seismic lateral forces.~~

~~**SPECIAL TRANSVERSE REINFORCEMENT.** Reinforcement composed of spirals, closed stirrups or hoops and supplementary cross ties provided to restrain the concrete and qualify the portion of the component, where used, as a confined region.~~

VEHICLE BARRIER SYSTEM. A system of building components near open sides of a garage floor or ramp, or building walls that act as restraint for vehicles.

~~**WALL, LOAD BEARING.** Any wall meeting either of the following classifications:~~

1. ~~Any metal or wood stud wall that supports more than 100 pounds per linear foot (plf) (1459 N/m) of vertical load in addition to its own weight.~~
2. ~~Any masonry or concrete wall that supports more than 200 plf (2919 N/m) of vertical load in addition to its own weight.~~

~~**WALL, NONLOAD BEARING.** Any wall that is not a load-bearing wall.~~

***NOTE: ALL OTHER PORTIONS OF THIS SECTION 1602.1 TO REMAIN AS SET FORTH IN THE 2003 INTERNATIONAL BUILDING CODE.**

1603.1.6 — DELETE IN ITS ENTIRETY.

1603.3 Reserved. ~~**Live loads posted.** Where the live loads for which each floor or portion thereof of a commercial or industrial building is or has been designed to exceed 50 psf (2.40 kN/m^2), such design live loads shall be conspicuously posted by the owner in that part of each story in which they apply, using durable signs. It shall be unlawful to remove or deface such notices.~~

1604.8.2 Concrete and masonry walls. Concrete and masonry walls shall be anchored to floors, roofs and other structural elements that provide lateral support for the wall. Such anchorage shall provide a positive direct connection capable of resisting the horizontal forces specified in this chapter but not less than a minimum strength design horizontal force of 280 plf (4.10 kN/m) of wall, substituted for "*E*" in the load combinations of Section 1605.2 or 1605.3. Walls shall be designed to resist bending between anchors where the anchor spacing exceeds 4 feet (1219 mm). Required anchors in masonry walls of hollow units or cavity walls shall be embedded in a reinforced grouted structural element of the wall. See Sections 1609.6.2.2 for wind design requirements and see Sections 1620 and 1621 for ~~wind and~~ earthquake design requirements unless exempted by Section 1614.1.

1604.9 Counteracting structural actions. Structural members and systems, and components and cladding, shall be designed to resist forces due to earthquake and wind, with consideration of overturning, sliding, and uplift, and continuous load paths shall be provided for transmitting these forces to the foundation. Where sliding is used to isolate the elements, the effects of friction between sliding elements shall be included as a force.

1605.2.1 Basic load combinations. Where strength design or load and resistance factor design is used, structures and portions thereof shall resist the most critical effects from the following combinations of factored loads:

~~$1.4D$~~

$1.4\ (D + F)$ **(Equation 16-1)**

~~$1.2D + 1.6L + 0.5(L_r$ or S or $R)$~~

$1.2\ (D + F + T) + 1.6\ (L + H) + 0.5\ (L_r$ or S or $R)$ **(Equation 16-2)**

$1.2D + 1.6(L_r$ or S or $R) + (f_1L$ or $0.8W)$ **(Equation 16-3)**

$1.2D + 1.6W + f_1L + 0.5(L_r$ or S or $R)$ **(Equation 16-4)**

$1.2D + 1.0E + f_1L + f_2S$ **(Equation 16-5)**

~~$0.9D + (1.0E$ or $1.6W)$~~

$0.9D + 1.6W + 1.6H$ **(Equation 16-6)**

$0.9D + 1.0E + 1.6H$ **(Equation 16-7)**

where:

f_1 = 1.0 for floors in places of public assembly, for uniformly distributed live loads in excess of 100 pounds per square foot (4.79 kN/m^2), for concentrated live loads and for ~~parking~~ garage live loads.

f_1 = 0.5 for other uniformly distributed live loads.

f_2 = 0.7 for roof configurations (such as saw tooth) that do not shed snow off the structure.

f_2 = 0.2 for other roof configurations.

Exception: Where other factored load combinations are specifically required by the provisions of this code, such combinations shall take precedence.

1605.2.2 Other loads. ~~Where *F*, *H*, *P* or *T* is to be considered in design, each applicable load shall be added to the above combinations in accordance with Section 2.3.2 of ASCE 7.~~ Where F_a is to be considered in design, the load combinations of Section 2.3.3 of ASCE 7 shall be used.

1605.3.1 Basic load combinations. Where allowable stress design (working stress design), as permitted by this code, is used, structures and portions thereof shall resist the most critical effects resulting from the following combinations of loads:

$D + F$ **(Equation 16-~~7~~ 8)**

$D + H + F + L + T$ **(Equation 16-~~8~~ 9)**

$D + \cancel{L}\ H + F + (L_r$ or S or $R)$ **(Equation 16-~~9~~ 10)**

$D + H + F + 0.75\ (L + T) + 0.75\ (L_r$ or S or $R)$ **(Equation 16-11)**

$D + H + F + (W$ or $0.7E)$ **(Equation 16-12)**

$D + H + F + 0.75\ (W$ or $0.7E) + 0.75L + 0.75\ (L_r$ or S or $R)$ **(Equation 16-~~10~~13)**

$0.6D + W + H$ **(Equation 16-~~11~~ 14)**

$0.6D + 0.7E + H$ **(Equation 16-~~12~~ 15)**

Exceptions:

1. Crane hook loads need not be combined with roof live load or with more than three-fourths of the snow load or one-half of the wind load.
2. Flat roof snow loads of 30 psf (1.44 kN/m^2) or less need not be combined with seismic loads. Where flat roof snow loads exceed 30 psf (1.44 kN/m^2), 20 percent shall be combined with seismic loads.

1605.3.1.1 Stress increases. ~~**Load reduction.** It is permitted to multiply the combined effect of two or more variable loads by 0.75 and add to the effect of dead load. The combined load used in~~

~~design shall not be less than the sum of the effects of dead load and any one of the variable loads. The 0.7 factor on *E* does not apply for this provision.~~ Increases in allowable stresses specified in the appropriate materials section of this code or referenced standard shall not be used with the load combinations of Section 1605.3.1 except that a duration of load increase shall be permitted in accordance with Chapter 23.

1605.3.1.2 Other loads. ~~Where *F*, *H*, *P* or *T* are to be considered in design, the load combinations of Section 2.4.1 of ASCE 7 shall be used.~~ Where F_a is to be considered in design, the load combinations of Section 2.4.2 of ASCE 7 shall be used.

1605.3.2 Alternative basic load combinations. In lieu of the basic load combinations specified in Section 1605.3.1, structures and portions thereof shall be permitted to be designed for the most critical effects resulting from the following combinations. When using these alternate basic load combinations that include wind or seismic loads, allowable stresses are permitted to be increased or load combinations reduced, where permitted by the material section of this code or referenced standard. For load combinations that include the counteracting effects of dead and wind loads, only two-thirds of the minimum dead load likely to be in place during a design wind event shall be used. Where wind loads are calculated in accordance with Section ~~1909.6 or~~ 1609.6 or Section 6 of ASCE 7, the coefficient ω in the following equations shall be taken as 1.3. For other wind loads ω shall be taken as 1.0. When using these alternative load combinations to evaluate sliding, overturning and soil bearing at the soil-structure interface, the reduction of foundation overturning from Section 12.13.4 in ASCE 7 shall not be used. When using these alternative basic load combinations for proportioning foundations for loadings which include seismic loads, the vertical seismic load effect, E_v, in Equation 12.4-4 of ASCE 7 is permitted to be taken equal to zero.

$D + L + (L_r$ or S or $R)$	**(Equation 16-~~13~~ 16)**
$D + L + (\omega W)$	**(Equation 16-~~14~~ 17)**
$D + L + \omega W + S/2$	**(Equation 16-~~15~~ 18)**
$D + L + S + \omega W/2$	**(Equation 16-~~16~~ 19)**
$D + L + S + E/1.4$	**(Equation 16-~~17~~ 20)**
$0.9D + E/1.4$	**(Equation 16-~~18~~ 21)**

Exceptions:

1. Crane hook loads need not be combined with roof live load or with more than three-fourths of the snow load or one-half of the wind load.
2. Flat roof snow loads of 30 pounds per square foot (1.44 kN/m^2) or less need not be combined with seismic loads. Where flat roof snow loads exceed 30 psf (1.44 kN/m^2), 20 percent shall be combined with seismic loads.

1605.3.2.1 Other loads. Where *F*, *H*~~, *P*~~ or *T* are to be considered in design, 1.0 times each applicable load shall be added to the combinations specified in Section 1605.3.2.

1605.5 Heliports and helistops. Heliport and helistop landing ~~or touchdown~~ areas shall be designed for the following loads, combined in accordance with Section 1605:

1. Dead load, *D*, plus the gross weight of the helicopter, D_h, plus snow load, *S*.
2. Dead load, *D*, plus two single concentrated impact loads, *L*, approximately 8 feet (2438 mm) apart applied anywhere on the touchdown pad (representing each of the helicopter's two main landing gear, whether skid type or wheeled type), having a magnitude of 0.75 times the gross weight of the helicopter. Both loads acting together total 1.5 times the gross weight of the helicopter.
3. Dead load, *D*, plus a uniform live load, *L*, of 100 psf (4.79 kN/m^2).

   Exception: Landing areas designed for helicopters with gross weights not exceeding 3,000 pounds (13.34 kN) in accordance with items 1 and 2 shall be permitted to be designed using a 40 psf (1.92 kN/m^2) uniform live load in item 3, provided the landing area is identified with a 3,000 pound (13.34 kN) weight limitation. This 40 psf (1.92 kN/m^2) uniform live load shall not be reduced. The landing area weight limitation shall be indicated by the numeral "3" (kips) located in the bottom right corner of the landing area as viewed from the primary approach path. The landing area weight limitation number marking shall be a minimum of 5 feet (1524 mm) in height.

***TABLE 1607.1**

MINIMUM UNIFORMLY DISTRIBUTED LIVE LOADS AND MINIMUM CONCENTRATED LIVE LOADS[a]

OCCUPANCY OR USE	UNIFORM (psf)	CONCENTRATED (lbs.)
20. Hospitals		
Operating rooms, laboratories	60	1,000
~~Private~~ Patient rooms	40	1,000
~~Wards~~	~~40~~	~~1,000~~
Corridors above first floor	80	1,000
29. Roofs	~~See Section 1607.11~~	
Ordinary flat, pitched, and curved roofs	20	
Roofs used for promenade purposes	60	
Roofs used for roof gardens or assembly purposes	100	
Roofs used for other special purposes	Note I	Note I
Awnings and canopies		
Fabric construction supported by a lightweight rigid skeleton structure	5 nonreduceable	
All other construction	20	
Primary roof members, exposed to a work floor		
Single panel point of lower chord of room trusses or any point along primary structural members supporting roofs over manufacturing, storage warehouses, and repair garages		2000
All other occupancies		300
All roof surfaces subject to maintenance workers		300
35. Stairs and exits	~~100~~	Note f
One- and two-family dwellings	40	
All other	100	

i. Roofs used for other special purposes shall be designed for appropriate loads as approved by the building official.

***NOTE: PORTIONS OF THIS TABLE 1607.1 NOT SHOWN TO REMAIN AS SET FORTH IN THE 2003 INTERNATIONAL BUILDING CODE.**

1607.5 Partition loads. In office buildings and in other buildings where partition locations are subject to change, provision for partition weight shall be made, whether or not partitions are shown on the construction documents, unless the specified live load exceeds 80 psf (3.83 kN/m^2). Such partition load shall not be less than a uniformly distributed live load of ~~20~~ 15 psf (~~0.96~~ 0.74 kN/m^2).

1607.7.1 Handrails and guards. Handrails assemblies and guards shall be designed to resist a load of 50 plf (0.73 kN/m) applied in any direction at the top and to transfer this load through the supports to the structure.

Exceptions:

1. For one- and two- family dwellings, only the single, concentrated load required by Section 1607.7.1.1 shall be applied.

2. In Group I-3, F, H and S occupancies, for areas that are not accessible to the general public and that have an occupant load ~~no greater~~ less than 50, the minimum load shall be 20 pounds per foot (0.29 kN/m).

1607.9 Reduction in live loads. ~~The~~ Except for roof uniform live loads, all other minimum uniformly distributed live loads, L_o, in Table 1607.1 are permitted to be reduced according to the following provisions.

1607.9.1.1 Heavy live loads. Live loads that exceed 100 psf (4.79 kN/m_2) shall not be reduced. ~~except~~

Exceptions:

1. T~~t~~he live loads for members supporting two or more floors are permitted to be reduced by a maximum of 20 percent, but the live load shall not be less than *L* as calculated in Section 1607.9.1.
2. Where approved for uses other than storage, additional live load reductions shall be permitted when shown by the registered design professional that a rational approach has been used and that such reductions are warranted.

1607.9.2 Alternate floor live load reduction. As an alternative to Section 1607.9.1, floor live loads are permitted to be reduced in accordance with the following provisions. Such reductions shall apply to slab systems, beams, girders, columns, piers, walls and foundations.

1. A reduction shall not be permitted in Group A occupancies.
2. A reduction shall not be permitted when the live load exceeds 100 psf (4.79 kN/m²) except that the design live load for ~~columns may be~~ members supporting two or more floors is permitted to be reduced by 20 percent.
3. A reduction shall not be permitted in passenger vehicle parking garages except the live loads for members supporting two or more floors are permitted to be reduced by a maximum of 20 percent.
4. For live loads not exceeding 100 psf (4.79 kN/m^2), the design live load for any structural member supporting 150 square feet (13.94 m^2) or more is permitted to be reduced in accordance with the following equation:

$R =$ ~~"r"~~ 0.08 (A -150) **(Equation 16-~~22~~ 24)**

For SI: R = ~~"r"~~ 0.08 (A -13.94)

Such reduction shall not exceed the smallest of:

1. 40 percent for horizontal members,
2. 10 psf (0.48 kN/m^2 for horizontal members in passenger vehicle garages
3. 60 percent for vertical members, nor
4. ~~nor~~ *R* as determined by the following equation:

$R = 23.1\ (1 + D/L_o)$ **(Equation 16-~~23~~ 25)**

where:

A = Area of floor ~~or roof~~ supported by the member, square feet (m^2).

D = Dead load per square foot (m^2) of area supported.

L_o =Unreduced live load per square foot (m^2) of area supported.

R = Reduction in percent.

~~r = Rate of reduction equal to 0.08 percent for floors.~~

1607.11.1 Distribution of roof loads. Where uniform roof live loads are reduced to less than 20 psf (0.96 kN/m^2) in accordance with Section 1607.11.2.1, and involved in the design of structural members arranged so as to create continuity, the minimum applied loads shall be the full dead loads on all spans in combination with the roof live loads on adjacent spans or on alternate spans, whichever produces the greatest effect. See Section 1607.11.2 for minimum roof live loads and Section 1608.5 for partial snow loading.

1607.11.2 ~~Minimum~~ Reduction in roof live loads. ~~Minimum roof loads shall be determined for the specific conditions in accordance with Sections 1607.11.2.1 through 1607.11.2.4~~. The minimum uniformly distributed roof live loads, L_o Table 1607.1, are permitted to be reduced according to the following provisions.

1607.11.2.1 Flat, pitched and curved roofs. Ordinary flat, pitched and curved roofs ~~shall~~ are permitted to be designed for ~~the~~ a reduced roof live load~~s~~ as specified in the following equation or other controlling combinations of loads in Section 1605, whichever produces the greater load. In structures where special scaffolding is used as a work surface for workers and materials during maintenance and repair operations, a lower roof load than specified in the following equation shall not be used unless approved by the building official. Greenhouses shall be designed for a minimum roof live load of ~~10~~ 12 psf (~~0.479~~ 0.58 kN/m^2).

L_r = ~~20~~ $L_o R_1 R_2$ **(Equation 16-~~24~~ 26)**

where: $12 \le L_r \le 20$

For SI: L_r = ~~0.96~~ $L_o R_1 R_2$

where: $0.58 \le L_r \le 0.96$

L_r = ~~Roof~~ Reduced live load per square foot (m^2) of horizontal projection in pounds per square foot (kN/m^2).

The reduction factors R_1 and R_2 shall be determined as follows:

$R1$ = 1 for $A_t \le 200$ square feet (18.58 m^2) **(Equation 16-~~25~~ 27)**

R_1 = $1.2 - 0.001A_t$ for 200 square feet < A_t < 600 square feet **(Equation 16-~~26~~ 28)**

For SI: $1.2 - 0.011A_t$ for 18.58 square meters < A_t < 55.74 square meters

R_1 = 0.6 for $A_t \ge 600$ square feet (55.74 m^2) **(Equation 16-~~27~~29)**

where:

A_t = Tributary area (span length multiplied by effective width) in square feet (m^2) supported by any structural member, and

F = for a sloped roof, the number of inches of rise per foot (for SI: F = 0.12 X slope, with slope expressed in percentage points), and

F= for an arch or dome, rise-to-span ratio multiplied by 32, and

R_1 = 1 for $F \le 4$ **Equation 16-~~28~~ 30)**

R_2 = $1.2 - 0.05F$ for $4 < F < 12$ **(Equation 16-~~29~~ 31)**

$R_2 =$ 0.6 for $F \geq 12$ **(Equation 16-~~30~~ 32)**

1607.11.2.2 Special-purpose roofs. Roofs used for promenade purposes, ~~shall be designed for a minimum live load of 60 psf (2.87 kN/m^2). Roofs used for~~ roof gardens, ~~or~~ assembly purposes, or other special purposes shall be designed for a minimum live load ~~of 100 psf (4.79 kN/m^2). Roofs used for other special purposes shall be designed for appropriate loads, as directed or approved by the building official.~~ as required in Table 1607.1. Such roof live loads are permitted to be reduced in accordance with Section 1607.9.

1607.11.2.4 Awnings and canopies. Awnings and canopies shall be designed for a uniform live loads as required in Table 1607.1 ~~of 5 psf (0.240 kN/m^2)~~ as well as for snow loads and wind loads as specified in Sections 1608 and 1609.

1607.13 Interior walls and partitions. Interior walls and partitions that exceed 6 feet (1829 mm) in height, including their finish materials, shall have adequate strength to resist the loads to which they are subjected but not less than a horizontal load of 5 psf (0.240 kN/m^2).

Exception: Fabric partitions complying with Section 1607.13.1 shall not be required to resist the minimum horizontal load of 5 psf (0.24 kN/m^2).

1607.13.1 Fabric partitions. Fabric partitions that exceed 6 feet (1829 mm) in height, including their finish materials, shall have adequate strength to resist the following load conditions:

1. A horizontal distributed load of 5 psf (0.24 kN/m^2) applied to the partition framing. The total area used to determine the distributed load shall be the area of the fabric face between the framing members to which the fabric is attached. The total distributed load shall be uniformly applied to such framing members proportionally to the length of each member.
2. A concentrated load of 40 pounds (0.176 kN) applied to an 8 inch (203 mm) diameter area [50.3 in^2 (32,452 mm^2)] of the fabric face at a height of 54 inches (1,372 mm) above the floor.

1609.1.1 Determination of wind loads. Wind loads on every building or structure shall be determined in accordance with Section 6 of ASCE 7. The type of opening protection required, the basic wind speed, and the exposure category for a site are permitted to be determined in accordance with Section 1609 or ASCE 7. Wind shall be assumed to come from any horizontal direction and wind pressures shall be assumed to act normal to the surface considered.

Exceptions:

1. ~~Wind loads determined by the provisions of Section 1609.6.~~
~~2.~~ Subject to the limitations of Section 1609.1.1.1, the provisions of *SBCCI SSTD 10 Standard for Hurricane Resistant Residential Construction* shall be permitted for applicable Group R-2 and R-3 buildings.
~~3~~ 2. Subject to the limitations of Section 1609.1.1.1, residential structures using the provisions of the *AF&PA Wood Frame Construction Manual for One- and Two- Family Dwellings*.
~~4~~ 3. Designs using *NAAMM FP 1001 Guide Specification for Design of Metal Flagpoles*.
~~5~~ 4. Designs using TIA/EIA-222 for antenna-supporting structures and antennas.

1609.1.2 DELETE AND RESERVE.

1609.1.3 ~~Anchorage against overturning, uplift and sliding.~~ ~~Structural members and systems and components and cladding in a building or structure shall be anchored to resist wind-induced overturning, uplift and sliding and to provide continuous load paths for these forces to the foundation. Where a portion of the resistance to these forces is provided by dead load, the dead load, including the weight of soils and foundations, shall be taken as the minimum dead load likely to be in place during a design wind event. Where the alternate basic load combinations of Section 1605.3.2 are used, only two-thirds of the minimum dead load likely to be in place during a design wind event shall be used.~~

~~1609.1.4~~ Protection of openings. In wind-borne debris regions, glazing that receives positive external pressure in the lower 60 feet (18 288 mm) in buildings shall be assumed to be openings unless such glazing is impact resistant or protected with an impact-resistant covering meeting the requirements of an approved impact-resisting standard or ASTM E 1996 and of ASTM E 1886 referenced therein as follows:

1. Glazed openings located within 30 feet (9144 mm) of grade shall meet the requirements of the Large Missile Test of ASTM E 1996.
2. Glazed openings located more than 30 feet (9144 mm) above grade shall meet the provisions of the Small Missile Test of ASTM E 1996.

Exceptions:

1. Wood structural panels with a minimum thickness of 7/16 inch (11.1 mm) and maximum panel span of 8 feet (2438 mm) shall be permitted for opening protection in one- and two-story buildings. Panels shall be precut ~~to cover the glazed openings with attachment hardware provided.~~ so that they shall be attached to the framing surrounding the opening containing the product with the glazed opening. Panels shall be secured with the attachment hardware provided. Attachments shall be designed to resist the components and cladding loads determined in accordance with the provisions of ~~Section 1609.6.1.2~~ ASCE 7. Attachment in accordance with Table ~~1609.1.4~~ 1609.1.3 is permitted for buildings with a mean roof height of 33 feet (10 058 mm) or less where wind speeds do not exceed 130 mph (57.2 m/s).
2. Buildings in Category I as defined in Table 1604.5, including ~~production~~ greenhouses that are occupied for growing plants on a production or research basis, without public access. ~~as defined in Section 1608.3.3.~~

TABLE ~~1609.1.4~~ 1609.1.3
WIND-BORNE DEBRIS PROTECTION FASTENING SCHEDULE FOR WOOD STRUCTURAL PANELS[a,b,c,d]

FASTENER TYPE	FASTENER SPACING (inches)			
	~~Panel span ≤ 2 feet~~	~~2 feet <~~ Panel span ≤ 4 feet	4 feet < Panel span ≤ 6 feet	6 feet < Panel span ≤ 8 feet
~~2 1/2~~ No. 6 ~~Wood~~ screws	~~16~~	16	12	9
~~2 1/2~~ No. 8 ~~Wood~~ screws	~~16~~	16	16	12

For SI: 1 inch = 25.4 mm, 1 foot = 304.8 mm, 1 pound = 4.4 N, 1 mile per hour = 0.44 m/s.

a. This table is based on a maximum wind speed (3-second gust) of 130 mph and mean roof height of 33 feet or less.

b. Fasteners shall be installed at opposing ends of the wood structural panel. Fasteners shall be located a minimum of 1inch from the edge of the panel.

c. Fasteners shall be long enough to penetrate through the exterior wall covering and a minimum of 1 3/4 inches into wood wall framing and a minimum of 1 ¼ inches into concrete block or concrete or into steel framing by at least three threads. Fasteners shall be located a minimum of 2 ½ inches from the edge of concrete block or concrete.

d. Where screws are attached to masonry or masonry/stucco, they shall be attached utilizing vibration-resistant anchors having a minimum withdrawal capacity of 490 pounds.

1609.1.3.2 Louvers. Louvers protecting intake and exhaust ventilation ducts not assumed to be open that are located within 30 feet (9144 mm) of grade shall meet requirements of an approved impact-resisting standard or the Large Missile Test of ASTM E 1996.

1609.1.5 — DELETE IN ITS ENTIRETY.

***1609.2 Definitions.** The following words and terms shall, for the purposes of Section 1609.6, have the meanings shown herein.

~~**BUILDINGS AND OTHER STRUCTURES, FLEXIBLE.** Slender buildings and other structures that have a fundamental natural frequency less than 1 Hz.~~

~~**BUILDING, ENCLOSED.** A building that does not comply with the requirements for open or partially enclosed buildings.~~

~~**BUILDING, LOW-RISE.** Enclosed or partially enclosed buildings that comply with the following conditions:~~

~~1. Mean roof height, *h*, less than or equal to 60 feet (18 288 mm).~~

~~2. Mean roof height, *h*, does not exceed least horizontal dimension.~~

~~**BUILDING, OPEN.** A building having each wall at least 80 percent open. This condition is expressed for each wall by the equation:~~

~~$Ao \geq 0.8Ag$ **(Equation 16-31)**~~

~~where:~~

~~Ao = Total area of openings in a wall that receives positive external pressure, in square feet (m^2).~~

~~Ag = The gross area of that wall in which Ao is identified, in square feet (m^2).~~

~~**BUILDING, PARTIALLY ENCLOSED.** A building that complies with both of the following conditions:~~

~~1. The total area of openings in a wall that receives positive external pressure exceeds the sum of the areas of openings in the balance of the building envelope (walls and roof) by more than 10 percent; and~~

~~2. The total area of openings in a wall that receives positive external pressure exceeds 4 square feet (0.37 m2) or 1 percent of the area of that wall, whichever is smaller, and the percentage of openings in the balance of the building envelope does not exceed 20 percent.~~

~~These conditions are expressed by the following equations:~~

~~$Ao > 1.10Aoi$ **(Equation 16-32)**~~

~~Ao>4 square feet (0.37m^2) or>0.01Ag, whichever is smaller, and$Aoi / Agi \leq 0.20$ **(Equation 16-33)**~~

~~where:~~

~~A_o, A_g are as defined for an open building.~~

~~A_{oi} = The sum of the areas of openings in the building envelope (walls and roof) not including Ao, in square feet (m^2).~~

~~A_{gi} = The sum of the gross surface areas of the building envelope (walls and roof) not including Ag, in square feet (m^2).~~

~~**BUILDING, SIMPLE DIAPHRAGM.** A building in which wind loads are transmitted through floor and roof diaphragms to the vertical lateral-force-resisting systems.~~

~~**COMPONENTS AND CLADDING.** Elements of the building envelope that do not qualify as part of the main windforce-resisting system.~~

~~**EFFECTIVE WIND AREA.** The area used to determine *GCp*. For component and cladding elements, the effective wind area in Tables 1609.6.2.1(2) and 1609.6.2.1(3) is the span length multiplied by an effective width that need not be less than one-third the span length. For cladding fasteners, the effective wind area shall not be greater than the area that is tributary to an individual fastener~~.

~~**IMPORTANCE FACTOR, I_w.** A factor that accounts for the degree of hazard to human life and damage to property.~~

~~**MAIN WINDFORCE-RESISTING SYSTEM.** An assemblage of structural elements assigned to provide support and stability for the overall structure. The system generally receives wind loading from more than one surface.~~

~~**MEAN ROOF HEIGHT.** The average of the roof eave height and the height to the highest point on the roof surface, except that eave height shall be used for roof angle of less than or equal to 10 degrees (0.1745 rad).~~

***NOTE: ALL OTHER PORTIONS OF THIS SECTION 902.1 TO REMAIN AS SET FORTH IN THE 2003 INTERNATIONAL BUILDING CODE.**

1609.3 Basic wind speed. The basic wind speed, in mph, for the determination of the wind loads shall be 110 mph (3 second gust). ~~determined by Figure 1609 or by ASCE 7 Figure 6-1 when using the provisions of ASCE 7. Basic wind speed for the special wind regions indicated, near mountainous terrain, and near gorges, shall be in accordance with local jurisdiction requirements. Basic wind speeds determined by the local jurisdiction shall be in accordance with Section 6.5.4 of ASCE 7.~~

~~In nonhurricane-prone regions, when the basic wind speed is estimated from regional climatic data, the basic wind speed shall be not less than the wind speed associated with an annual probability of 0.02 (50-year mean recurrence interval), and the estimate shall be adjusted for equivalence to a 3-second gust wind speed at 33 feet (10 m) above ground in exposure Category C. The data analysis shall be performed in accordance with Section 6.5.4 of ASCE 7.~~

1609.3.1 Wind speed conversion. When required, the 3-second gust basic wind ~~velocities~~ speeds of Figure 1609 shall be converted to fastest-mile wind ~~velocities~~ speeds, V_{fm} using Table 1609.3.1 or Equation 16-33.

$V_{fm} =$ $(V_{3S} - 10.5)/1.05$ **(Equation 16-33)**

where:

$V_{3S} =$ 3-second gust basic wind speed from Figure 1609.

TABLE 1609.3.1
EQUIVALENT BASIC WIND SPEEDS[a,b,c]

V_{3S}	85	90	100	105	110	120	125	130	140	145	150	160	170
V_{fm}	~~70~~ 71	~~75~~ 76	~~80~~ 85	~~85~~ 90	~~90~~ 95	~~100~~ 104	~~105~~ 109	~~110~~ 114	~~120~~ 123	~~125~~ 128	~~130~~ 133	~~140~~ 142	~~150~~ 152

For SI: 1 mile per hour = 0.44 m/s.
a. Linear interpolation is permitted.
b. V_{3S} is the 3-second gust wind speed (mph).
c. V_{fm} is the fastest mile wind speed (mph).

1609.4 Exposure category. For each wind direction considered, an exposure category that adequately reflects the characteristics of ground surface irregularities shall be determined for the site at which the building or structure is to be constructed. ~~For a site located in the transition zone between categories, the category resulting in the largest wind forces shall apply.~~ Account shall be taken of variations in ground surface roughness that arise from natural topography and vegetation as well as from constructed features. ~~For any given wind direction, the exposure in which a specific building or other structure is sited shall be assessed as being one of the following categories. When applying the simplified wind load method of Section 1609.6, a single exposure category shall be used based upon the most restrictive for any given wind direction.~~

1. **Exposure A.** This exposure category is no longer used in ASCE 7.
2. **Exposure B.** Urban and suburban areas, wooded areas or other terrain with numerous closely spaced obstructions having the size of single-family dwellings or larger. Exposure B shall be assumed unless the site meets the definition of another type of exposure.
3. **Exposure C.** Open terrain with scattered obstructions, including surface undulations or other irregularities, having heights generally less than 30 feet (9144 mm) extending more than 1,500 feet (457.2 m) from the building site in any quadrant. This exposure shall also apply to any building located within Exposure B-type terrain where the building is directly adjacent to open areas of Exposure C-type terrain in any quadrant for a distance of more than 600 feet (182.9 m). This category includes flat open country, grasslands and shorelines in hurricane-prone regions.
4. **Exposure D.** Flat, unobstructed areas exposed to wind flowing over open water (excluding shorelines in hurricane-prone regions) for a distance of at least 1 mile (1.61 km). Shorelines in Exposure D include inland waterways, the Great Lakes and coastal areas of California, Oregon, Washington and Alaska. This exposure shall apply only to those buildings and other structures exposed to the wind coming from over the water. Exposure D extends inland from the shoreline a distance of 1,500 feet (460 m) or 10 times the height of the building or structure, whichever is greater.

1609.4.1 Wind directions and sectors. For each selected wind direction at which the wind loads are to be evaluated, the exposure of the building or structure shall be determined for the two upwind sectors extending 45 degrees (0.79 rad) either side of the selected wind direction. The exposures in these two sectors shall be determined in accordance with Sections1609.4.2 and 1609.4.3 and the exposure resulting in the highest wind loads shall be used to represent winds from that direction.

1609.4.2 Surface roughness categories. A ground surface roughness within each 45-degree (rad) sector shall be determined for a distance upwind of the site as defined in Section 1609.4.3 from the categories defined below, for the purpose of assigning an exposure category as defined in Section 1609.4.3.

Surface Roughness B: Urban and suburban areas, wooded areas or other terrain with numerous closely spaced obstructions having the size of single-family dwellings or larger.

Surface Roughness C: Open terrain with scattered obstructions having heights generally less than 30 feet (9.1 m). This category includes flat open country, grasslands, and all water surfaces in hurricane-prone regions.

Surface Roughness D: Flat, unobstructed areas and water surfaces outside hurricane-prone regions. This category includes smooth mud flats, salt flats and unbroken ice.

1609.4.3 Exposure categories. An exposure category shall be determined in accordance with the following:

Exposure B. Exposure B shall apply where the ground surface roughness condition, as defined by Surface Roughness B, prevails in the upwind direction for a distance of at least 2600 feet (792 m) or 20 times the height of the building, whichever is greater.

Exception: For buildings whose mean roof height is less than or equal to 30 feet (9.1 m), the upwind distance is permitted to be reduced to 1500 feet (457 m).

Exposure C. Exposure C shall apply for all cases where Exposures B or D do not apply.

Exposure D. Exposure D shall apply where the ground surface roughness, as defined by Surface Roughness D, prevails in the upwind direction for distance of at least 5000 feet (1524 m) or 20 times the height of the building, whichever is greater. Exposure D shall extend inland from the shoreline for a distance of 600 feet (183 m) or 20 times the height of the building, whichever is greater.

~~**1609.5 Importance factor.** Buildings and other structures shall be assigned a wind load importance factor, *Iw*, in accordance with Table 1604.5.~~

1609.6 — DELETE IN ITS ENTIRETY, INCLUDING TABLES AND EQUATIONS.

~~**1609.7**~~ **1609.5 Roof systems.**

~~**1609.7.1**~~ **1609.5.1 Roof deck.** The roof deck shall be designed to withstand the wind pressures determined ~~under either the provisions of Section 1609.6 for buildings with a mean roof height not exceeding 60 feet (18 288 mm) or Section 1609.1.1 for buildings of any height~~ in accordance with ASCE 7.

~~**1609.7.2**~~ **1609.5.2 Roof coverings.** Roof coverings shall comply with Section ~~1609.7.1~~ 1609.5.1.

Exception: Rigid tile roof coverings that are air permeable and installed over a roof deck complying with Section ~~1609.7.1~~ 1609.5.1. are permitted to be designed in accordance with Section ~~1609.7.3.~~ 1609.5.3.

Asphalt shingles designed using UL2390 to determine appropriate uplift and force coefficients applied to the shingle are permitted to be installed over a roof deck complying with Section 1609.5.1.

~~**1609.7.3**~~ **1609.5.3 Rigid tile.** Wind loads on rigid tile roof coverings shall be determined in accordance with the following equation:

NOTE: RENUMBER EQUATION 16-36 TO 16-34.

$$M_a = q_h C_L b L L_a [1.0 - Gc_p] \qquad \text{(Equation 16-36)}$$

$$\text{For SI: } M_a = \frac{q_h C_L b L L_a [1.0 - Gc_p]}{1{,}000}$$

where:

b = Exposed width, feet (mm) of the roof tile.

C_L = Lift coefficient. The lift coefficient for concrete and clay tile shall be 0.2 or shall be determined by test in accordance with Section 1715.2.

GC_p = Roof pressure coefficient for each applicable roof zone determined from Section 6 of ASCE 7. Roof coefficients shall not be adjusted for internal pressure.

L = Length, feet (mm) of the roof tile.

L_a = Moment arm, feet (mm) from the axis of rotation to the point of uplift on the roof tile. The point of uplift shall be taken at 0.76L from the head of the tile and the middle of the exposed width. For roof tiles with nails or screws (with or without a tail clip), the axis of rotation shall be taken as the head of the tile for direct deck application or as the top edge of the batten for battened applications. For roof tiles fastened only by a nail or screw along the side of the tile, the axis of rotation shall be determined by testing. For roof tiles installed with battens and fastened only by a clip near the tail of the tile, the moment arm shall be determined about the top edge of the

batten with consideration given for the point of rotation of the tiles based on straight bond or broken bond and the tile profile.

M_a = Aerodynamic uplift moment, feet-pounds (N-mm) acting to raise the tail of the tile.

q_h = Wind velocity pressure, psf (kN/m^2) determined from Section 6.5.10 of ASCE 7.

Concrete and clay roof tiles complying with the following limitations shall be designed to withstand the aerodynamic uplift moment as determined by this section.

1. The roof tiles shall be either loose laid on battens, mechanically fastened, mortar set or adhesive set.
2. The roof tiles shall be installed on solid sheathing which has been designed as components and cladding.
3. An underlayment shall be installed in accordance with Chapter 15.
4. The tile shall be single lapped interlocking with a minimum head lap of not less than 2 inches (51 mm).
5. The length of the tile shall be between 1.0 and 1.75 feet (305 mm and 533 mm).
6. The exposed width of the tile shall be between 0.67 and 1.25 feet (204 mm and 381 mm).
7. The maximum thickness of the tail of the tile shall not exceed 1.3 inches (33 mm).
8. Roof tiles using mortar set or adhesive set systems shall have at least two-thirds of the tile's area free of mortar or adhesive contact.

SECTION 1612

DELETE AND RESERVE ENTIRE SECTION

(See Chapter 19 of the City Code)

1616.3 Determination of seismic design category. All structures shall be assigned to a seismic design category based on their seismic use group and the design spectral response acceleration coefficients, *SDS* and *SD1*, determined in accordance with Section 1615.1.3 or 1615.2.5. Each building and structure shall be assigned to the most severe seismic design category in accordance with Table 1616.3(1) or 1616.3(2), irrespective of the fundamental period of vibration of the structure, *T*. All structures in this jurisdiction shall be assigned to Seismic Design Category A.

~~**Exception:** The seismic design category is permitted to be determined from Table 1616.3(1) alone when all of the following apply:~~

1. ~~The approximate fundamental period of the structure, *Ta*, in each of the two orthogonal directions determined in accordance with Section 9.5.5.3.2 of ASCE 7, is less than 0.8 *Ts* determined in accordance with Section 1615.1.4,~~
2. ~~Equation 9.5.5.2.1-1 of ASCE 7 is used to determine the seismic response coefficient, *Cs*, and~~
3. ~~The diaphragms are rigid as defined in Section 1602.~~

1616.4 Design requirements for Seismic Design Category A. Structures assigned to Seismic Design Category A need only comply with the requirements of Sections 1616.4.1 through 1616.4.5. This jurisdiction is classified as Seismic Design Category A.

***EDITOR'S NOTE: RENUMBER REMAINDER OF CHAPTER 16 EQUATIONS.**

CHAPTER 17
STRUCTURAL TESTS AND SPECIAL INSPECTIONS

1702.1 General. The following words and terms shall, for the purposes of this chapter and as used elsewhere in this code, have the meanings shown herein.

FABRICATED ITEM. Structural, load-bearing or lateral load-resisting assemblies consisting of materials assembled prior to installation in a building or structure, or subjected to operations such as heat treatment, thermal cutting, cold working or reforming after manufacture and prior to installation in a building or structure. Materials produced in accordance with standard specifications referenced by this code, such as rolled structural steel shapes, steel-reinforcing bars, masonry units and ~~plywood sheets~~ wood structural panels, shall not be considered "fabricated items."

1703.4.1 Research and investigation. Sufficient technical data shall be submitted to the building official to substantiate the proposed use of any material or assembly. If it is determined that the evidence submitted is satisfactory proof of performance for the use intended, the building official shall approve the use of the material or assembly subject to the requirements of this code. The costs ~~offsets~~, reports and investigations required under these provisions shall be paid by the permit applicant.

1704.1 General. Where application is made for construction as described in this section, the owner or the registered design professional in responsible charge acting as the owner's agent shall employ one or more special inspectors to provide inspections during construction on the types of work listed under Section 1704. The special inspector shall be an approved agency or the design professional of record (architect or engineer or his/her authorized representative) who is qualified to inspect the particular type of construction requiring special inspection. ~~a qualified person who shall demonstrate competence, to the satisfaction of the building official, for inspection of the particular type of construction or operation requiring special inspection. These inspections are in addition to the inspections specified in Section 109.~~

Exceptions:

1. Special inspections are not required for work of a minor nature or as warranted by conditions in the jurisdiction as approved by the building official.

2. Special inspections are not required for building components unless the design involves the practice of professional engineering or architecture as defined by applicable state statutes and regulations governing the professional registration and certification of engineers or architects.

3. Unless otherwise required by the building official, special inspections are not required for occupancies in Group R-3 as applicable in Section 101.2 and occupancies in Group U that are accessory to a residential occupancy including, but not limited to, those listed in Section 312.1.

1704.1.1 ~~**Building permit requirement.** The permit applicant shall submit a statement of special inspections prepared by the registered design professional in responsible charge in accordance with Section 106.1 as a condition for permit issuance. This statement shall include a complete list of materials and work requiring special inspections by this section, the inspections to be performed and a list of the individuals, approved agencies or firms intended to be retained for conducting such inspections~~.

~~**1704.1.2 Report requirement.** Special inspectors shall keep records of inspections. The special inspector shall furnish inspection reports to the building official, and to the registered design professional in responsible charge. Reports shall indicate that work inspected was done in conformance to approved construction documents. Discrepancies shall be brought to the immediate attention of the contractor for correction. If the discrepancies are not corrected, the discrepancies shall be brought to the attention of the building official and to the registered design professional in responsible charge prior to the completion of that phase of the work. A final report documenting required special inspections and correction of any discrepancies noted in the inspections shall be submitted at a point in time agreed upon by the permit applicant and the building official prior to the start of work~~. **Duties and responsibilities of the special inspector.** The special inspector shall observe the work to ascertain to the best of his/her knowledge and belief that it is in conformance with the approved design drawings and specifications.

The special inspector shall furnish inspection reports to the building official, engineer or architect of record, and other persons designated by the building official. All discrepancies shall be brought to the immediate attention of the contractor for correction, then to the design professional and to the building official.

The special inspector shall submit a final signed report properly certified by an engineer or architect with professional's seal embossed, stating whether the work requiring special inspection was, to the best of the inspector's knowledge, in conformance with the design professional's permitted construction plans and specifications and the applicable workmanship provisions of this code.

1704.3 Steel construction. The special inspections for steel elements of buildings and structures shall be as required by Section 1704.3 and Table 1704.3. ~~Where required, special inspection of steel shall also comply with Section 1715.~~

Exceptions:

1. Special inspection of the steel fabrication process shall not be required where the fabricator does not perform any welding, thermal cutting or heating operation of any kind as part of the fabrication process. In such cases, the fabricator shall be required to submit a detailed procedure for material control that demonstrates the fabricator's ability to maintain suitable records and procedures such that, at any time during the fabrication process, the material specification, grade and mill test reports for the main stress-carrying elements are capable of being determined.

2. The special inspector need not be continuously present during welding of the following items, provided the materials, welding procedures and qualifications of welders are verified prior to the start of the work; periodic inspections are made of the work in progress and a visual inspection of all welds is made prior to completion or prior to shipment of shop welding.

2.1. Single-pass fillet welds not exceeding 5/16 inch (7.9 mm) in size.

2.2. Floor and roof deck welding.

2.3. Welded studs when used for structural diaphragm.

2.4. Welded sheet steel for cold-formed steel framing members such as studs and joists.

2.5. Welding of stairs and railing systems.

1704.4 Concrete construction. The special inspections and verifications for concrete construction shall be as required by this section and Table 1704.4.

Exception: Special inspections shall not be required for:

1. Isolated spread concrete footings of buildings three stories or less in height that are fully supported on earth or rock.

2. Continuous concrete footings supporting walls of buildings three stories or less in height that are fully supported on earth or rock where:

2.1. The footings support walls of light frame construction;

2.2. The footings are designed in accordance with Table 1805.4.2; or

2.3. The structural design of the footing is based on a specified compressive strength, $f'_{c'}$ no greater than 2,500 pounds per square inch (psi) (17.2 Mpa), regardless of the compressive strength specified in the construction documents or used in the footing construction.

3. Nonstructural concrete slabs supported directly on the ground, including prestressed slabs on grade, where the effective prestress in the concrete is less than 150 psi (1.03 Mpa).

4. Concrete foundation walls constructed in accordance with Table 1805.5(1), 1805.5(2), 1805.5(3) or 1805.5(4).

5. Concrete patios, driveways and sidewalks, on grade.

1704.5 Masonry construction. Masonry construction shall be inspected and evaluated in accordance with the requirements of ~~this section~~ Sections 1704.5.1 through 1704.5.3, depending on the classification of the building or structure or nature of occupancy, as defined by this code (see Table 1604.5 and Section 1617.6).

Exception: Special inspections shall not be required for:

1. Empirically designed masonry, glass unit masonry or masonry veneer designed by Section 2109 or 2110 or Chapter 14, respectively, or by Chapters 5, 6 or 7 of ACI 530/ASCE 5/TMS 402, respectively, ~~Chapters 5, 6 or 7,~~ when they are part of nonessential buildings (see Table 1604.5 and Section 1617.6).

2. Masonry foundation walls constructed in accordance with Table 1805.5(1), 1805.5(2), 1805.5(3) or 1805.5(4).

3. Masonry fireplaces, masonry heaters or masonry chimneys installed or constructed in accordance with Section 2111, 2112 or 2113.

1704.5.1 Empirically designed masonry, glass unit masonry and masonry veneer in essential facilities. The minimum inspection program for empirically designed masonry, glass unit masonry or masonry veneer designed by ~~Chapter 14,~~ Section 2109 or 2110 or by Chapter14, respectively, or by Chapter 5, 6 or 7 of ACI 530/ASCE 5/TMS 402, respectively, in essential facilities (see Table 1604.5 and Section 1616.2) shall comply with Table 1704.5.1.

1704.5.2 Engineered masonry in nonessential facilities. The minimum special inspection program for masonry designed by Section ~~2106,~~ 2107 or 2108, or by chapters other than Chapters 5, 6 or 7 of ACI 530/ASCE 5/TMS 402, in nonessential facilities (see Table 1604.5 and Section 1617.6), shall comply with Table 1704.5.1.

1704.5.3 Engineered masonry in essential facilities. The minimum special inspection program for masonry designed by Section ~~2106,~~ 2107 or 2108, or by chapters other than Chapters 5, 6 ~~or~~ and7 of ACI 530/ASCE 5/TMS 402, in essential facilities (see Table 1604.5 and Section 1616.2), shall comply with Table 1704.5.3.

1704.9 Reserved. ~~**Pier foundations.** Special inspection is required for pier foundations for buildings assigned to Seismic Design Category C, D, E or F in accordance with Section 1616.3.~~

1704.14.2 Qualifications. Special ~~inspection~~ ~~agencies~~ inspectors for smoke control other than stair pressurization shall be licensed engineers in the State of Texas and shall have expertise in fire protection engineeringand mechanical engineering and shall utilize the services of a NEBB or AABC certified ~~certification~~ ~~as~~ air ~~balancers~~ balancing agency.

1706.1.1 Where required. A quality assurance plan for wind requirements shall be provided for all structures constructed in the following areas:

1. In wind exposure Categories A and B, where the 3-second-gust basic wind speed is 120 miles per hour (mph) (52.8 m/sec) or greater.

2. In wind exposure Categories C and D, where the 3-second-gust basic wind speed is greater than 110 mph (49 m/sec) ~~or greater~~.

   Exception: A quality assurance plan is not required for structures designed and constructed in accordance with the *International Residential Code* or the conventional construction provisions of Section 2308 of this code, provided that all of the applicable items listed in Section 1706.1.2 are inspected during construction by a qualified person approved by the building official.

1707.7.1 Component inspection. Special inspection is required for the installation of the following components, where the component has a Component Importance Factor of ~~1.0 or~~ 1.5 in accordance with Section 9.6.1.5 of ASCE 7, shall maintain an approved quality control program. Evidence of the quality control program shall be permanently identified on each piece of equipment by a label.

1. Equipment using combustible energy sources.

2. Electrical motors, transformers, switchgear unit substations and motor control centers.

3. Reciprocating and rotating-type machinery.

4. Piping distribution systems 3 inches (76 mm) and larger.

5. Tanks, heat exchangers and pressure vessels.

1715.1.1 Test standards for joist hangers. The vertical load-bearing capacity, torsional moment capacity and deflection characteristics of joist hangers shall be determined in accordance with ASTM D 1761, using lumber having a specific gravity of 0.49 or greater, but not greater than 0.55, as determined in accordance with AFPA NDS for the joist and hangers.

Exception: The joist length shall not be required to exceed 24 inches (610 mm).

1715.1.2 Vertical load capacity for joist hangers. The vertical load capacity for the joist hanger shall be determined by testing a minimum of three joist hanger assemblies as specified in ASTM D 1761. If the ultimate vertical load for any one of the tests varies more than 20 percent from the average ultimate vertical load, at least three additional tests shall be conducted. The allowable vertical load ~~for a normal duration of loading~~ of the joist hanger shall be the lowest value determined from the following:

1. The lowest ultimate vertical load for a single hanger from any test divided by three (where three tests are conducted and each ultimate vertical load does not vary more than 20 percent from the average ultimate vertical load).

2. The average ultimate vertical load for a single hanger from all tests divided by six (where six or more tests are conducted).

3. The average from all tests of the vertical loads ~~at~~ which ~~the~~ produce a vertical movement of the joist with respect to the header ~~is~~ of 0.125 inch (3.2 mm) ~~in any test~~.

4. The sum of the allowable design loads for nails or other fasteners utilized to secure the joist hanger to the wood members and allowable bearing loads that contribute to the capacity of the hanger.

5. The allowable design load for the wood members forming the connection.

1715.1.3 Torsional moment capacity for joist hangers. The torsional moment capacity for the joist hanger shall be determined by testing at least three joist hanger assemblies as specified in ASTM D 1761. The allowable torsional moment ~~for normal duration of loading~~ of the joist hanger shall be the average torsional moment at which the lateral movement of the top or bottom of the joist with respect to the original position of the joist is 0.125 inch (3.2 mm).

1715.1.4 Design value modifications for joist hangers. Allowable design values for joist hangers that are determined by Item 4 or 5 in Section 1715.1.2 shall be permitted to be modified by the appropriate duration of loading factors as specified in AFPA NDS but shall not exceed the direct loads as determined by Item 1, 2 or 3 in Section 1715.1.2. Allowable design values determined by Item 1, 2 or 3 in Section~~s~~ 1715.1.2 ~~and 2305.1~~ shall not be modified by duration of loading factors.

CHAPTER 18
SOILS AND FOUNDATIONS

1802.1 General. ~~Foundation and soils investigations shall be conducted in conformance with Sections 1802.2 through 1802.6. Where required by the building official, the classification and investigation of the soil shall be made by a registered design professional~~. The classification of the soil at each building shall be determined when required by the building official. The building official may require that this determination be made by an engineer or architect licensed by the state to practice as such.

1802.2 ~~**Where required.** The owner or applicant shall submit a foundation and soils investigation to the building official where required in Sections 1802.2.1 through 1802.2.7.~~ **Investigation.** The classification shall be based on observation and any necessary tests of the materials disclosed by borings or excavations made in appropriate locations. Additional studies may be necessary to evaluate soil strength, the effect of moisture variation on soil-bearing capacity, compressibility, liquefaction and expansiveness.

Exceptions:

1. The building official may waive this evaluation upon receipt of written opinion of a qualified geotechnical engineer or geologist that liquefaction is not probable.
2. A Group R-3, detached single-story dwelling unit, with or without attached garages.
3. Group U occupancies.
4. Fences.

~~**Exception:** The building official need not require a foundation or soils investigation where satisfactory data from adjacent areas is available that demonstrates an investigation is not necessary for any of the conditions in Sections 1802.2.1 through 1802.2.6.~~

~~**1802.2.1 Questionable soil.** Where the safe-sustaining power of the soil is in doubt, or where a load-bearing value superior to that specified in this code is claimed, the building official shall require that the necessary investigation be made. Such investigation shall comply with the provisions of Sections 1802.4 through 1802.6.~~

~~**1802.2.2 Expansive soils.** In areas likely to have expansive soil, the building official shall require soil tests to determine where such soils do exist.~~

~~**1802.2.3 Ground-water table.** A subsurface soil investigation shall be performed to determine whether the existing ground-water table is above or within 5 feet (1524 mm) below the elevation of the lowest floor level where such floor is located below the finished ground level adjacent to the foundation.~~

~~**Exception:** A subsurface soil investigation shall not be required where waterproofing is provided in accordance with Section 1807.~~

~~**1802.2.4 Pile and pier foundations.** Pile and pier foundations shall be designed and installed on the basis of a foundation investigation and report as specified in Sections 1802.4 through 1802.6 and Section 1808.2.1.~~

~~**1802.2.5 Rock strata.** Where subsurface explorations at the project site indicate variations or doubtful characteristics in the structure of the rock upon which foundations are to be constructed, a sufficient number of borings shall be made to a depth of not less than 10 feet (3048 mm) below the level of the foundations to provide assurance of the soundness of the foundation bed and its load bearing capacity.~~

~~**1802.2.6 Seismic Design Category C.** Where a structure is determined to be in Seismic Design Category C in accordance with Section 1616, an investigation shall be conducted, and shall include an evaluation of the following potential hazards resulting from earthquake motions: slope instability, liquefaction and surface rupture due to faulting or lateral spreading.~~

~~**1802.2.7 Seismic Design Category D, E or F.** Where the structure is determined to be in Seismic Design Category D, E or F, in accordance with Section 1616, the soils investigation requirements for Seismic Design Category C, given in Section 1802.2.6, shall be met, in addition to the following. The investigation shall include:~~

~~1. A determination of lateral pressures on basement and retaining walls due to earthquake motions.~~

~~2. An assessment of potential consequences of any liquefaction and soil strength loss, including estimation of differential settlement, lateral movement or reduction in foundation soil-bearing capacity, and shall address mitigation measures. Such measures shall be given consideration in the design of the structure and can include, but are not limited to, ground stabilization, selection of appropriate foundation type and depths, selection of appropriate structural systems to accommodate anticipated displacements or any combination of these measures. The potential for liquefaction and soil strength loss shall be evaluated for site peak ground acceleration magnitudes and source characteristics consistent with the design earthquake ground motions. Peak ground acceleration shall be determined from a site- specific study taking into account soil amplification effects, as specified in Section 1615.2.~~

~~**Exception:** A site-specific study need not be performed provided that peak ground acceleration equal to S_{DS}/2.5 is used, where S_{DS} is determined in accordance with Section 1615.2.1.~~

1803.3 Site grading. The ground immediately adjacent to the foundation shall be sloped away from the building at a slope of not less than one unit vertical in 20 units horizontal (5-percent slope) for a minimum distance of 10 feet (3048 mm) measured perpendicular to the face of the wall. If physical obstructions or lot lines prohibit 10 feet (3048 mm) of horizontal distance, a 5-percent slope shall be provided to ~~or~~ an approved alternate method of diverting water away from the foundation. ~~shall be used.~~ Swales used for this purpose shall be sloped a minimum of 2 percent where located within 10 feet (3048 mm) of the building foundation. Impervious surfaces within 10 feet (3048 mm) of the building foundation shall be sloped a minimum of 2 percent away from the building.

Exception: Where climatic or soil conditions warrant, the slope of the ground away from the building foundation is permitted to be reduced to not less than one unit vertical in 48 units horizontal (2-percent slope).

The procedure used to establish the final ground level adjacent to the foundation shall account for additional settlement of the backfill.

1804.2 Presumptive load-bearing values. The maximum allowable foundation pressure, lateral pressure or lateral sliding-resistance values for supporting soils ~~at or~~ near the surface shall not exceed the values specified in Table 1804.2 unless data to substantiate the use of a higher value are submitted and approved.

Presumptive load-bearing values shall apply to materials with similar physical characteristics and dispositions.

Mud, organic silt, organic clays, peat or unprepared fill shall not be assumed to have a presumptive load- bearing capacity unless data to substantiate the use of such a value are submitted.

Exception: A presumptive load-bearing capacity is permitted to be used where the building official deems the load-bearing capacity of mud, organic silt or unprepared fill is adequate for the support of lightweight and temporary structures.

1805.4.1.1 Design loads. Footings shall be designed for the most unfavorable effects due to the combinations of loads specified in Section 1605.2 or 1605.3. The dead load ~~shall~~ is permitted to include the weight of foundations, footings and overlying fill. Reduced live loads, as specified in Sections 1607.9 and 1607.11, are permitted to be used in designing footings.

1805.4.5 Timber footings. Timber footings are permitted for buildings of Type V construction and as otherwise approved by the building official. Such footings shall be treated in accordance with AWPA ~~C2 or C3~~ U1 (Commodity Specification A, Use Category 4Band Sections 5.2). Treated timbers are not required where placed entirely below permanent water level, or where used as capping for wood piles that project above the water level over submerged or marsh lands. The compressive stresses perpendicular to grain in untreated timber footings supported upon treated piles shall not exceed 70 percent of the allowable stresses for the species and grade of timber as specified in the AFPA NDS.

1805.4.6 Wood foundations. Wood foundation systems shall be designed and installed in accordance with AFPA Technical Report No. 7. Lumber and plywood shall be treated in accordance with AWPA ~~C22~~ U1 (Commodity Specification A, Use Category 4B) and shall be identified in accordance with Section 2303.1.8.1.

1805.5 Foundation walls. Concrete and masonry foundation walls shall be designed in accordance with Chapter 19 or 21, respectively. Foundation walls that are laterally supported at the top and bottom and within the parameters of Tables 1805.5(1) through ~~1805.5(4)~~ 1805.5(5) are permitted to be designed and constructed in accordance with Sections 1805.5.1 through 1805.5.5.

1805.5.1.1 Thickness ~~based on walls supported~~ at top of foundation wall. The thickness of foundation walls shall not be less than the thickness of the wall supported, except that foundation walls of at least 8 inch (203 mm) nominal width are permitted to support brick-veneered frame walls and 10-inch-wide (254 mm) cavity walls provided the requirements of Section 1805.5.1.2 are met. Corbeling of masonry shall be in accordance with Section 2104.2. Where an 8-inch (203 mm) wall is corbeled, the top corbel shall not extend higher than the bottom of the floor framing and shall be a full course of headers at least 6 inches (152 mm) in length~~,~~ or the top course bed joint shall be tied to the vertical wall projection. The tie shall be W2.8 (4.8 mm) and spaced at a maximum horizontal distance of 36 inches (914 mm); the hollow space behind the corbelled masonry shall be filled with mortar or grout. ~~extending not higher than the bottom of the floor framing.~~

1805.5.1.2 Thickness based on soil loads, unbalanced backfill height and wall height. The thickness of foundation walls shall comply with the requirements of Table ~~1805.5(1)~~ 1805.5(5) for ~~plain masonry and plain~~ concrete walls or Table 1805.5(1), 1805.5(2), 1805.5(3) or 1805.5(4) for ~~reinforced concrete and~~ masonry walls. When using the tables, masonry shall be laid in running bond and the mortar shall be Type M or S.

Unbalanced backfill height is the difference in height of the exterior and interior finish ground levels. Where an interior concrete slab is provided, the unbalanced backfill height shall be measured from the exterior finish ground level to the top of the interior concrete slab.

1805.5.2 Foundation wall materials. Concrete ~~F~~ foundation walls constructed in accordance with Table 1805.5(5) shall comply with Section 1805.5.2.1. Masonry foundation walls constructed in accordance with Table 1805.5(1), 1805.5(2), 1805.5(3) or 1805.5(4) shall comply with ~~the following:~~ Section 1805.5.2.2.

1805.5.2.1 Concrete foundation walls. Concrete foundation walls shall comply with the following:

1. The size and spacing of vertical reinforcement shown in the table is based on the use of reinforcement with a minimum yield strength of 60,000 psi (414 Mpa). Vertical reinforcement with a minimum yield strength of 40,000 psi (276 Mpa) or 50,000 psi (345 Mpa) is permitted, provided the same size bar is used and the spacing shown in the table is reduced by multiplying the spacing by 0.67 or 0.83, respectively.

2. Vertical reinforcement, when required, shall be placed nearest the inside face of the wall a distance *d* from the outside face (soil side) of the wall. The distance *d* is equal to the wall thickness, *t*, minus 1.25 inches (32 mm) plus one-half the bar diameter, d_b ($d = t - (1.25 + d_b/2)$). The reinforcement shall be placed within a tolerance of ± 3/8 inch (9.5 mm) where *d* is less than or equal to 8 inches (203 mm), or ± ½ inch (12.7 mm) where *d* is greater than 8 inches (203 mm).

3. In lieu of the reinforcement shown in Table 1805.5(5), smaller reinforcing bar sizes with closer spacings that provide an equivalent cross-sectional area of reinforcement per unit length of wall are permitted.

4. Concrete cover for reinforcement measured from the inside face of the wall shall not be less than 3/4 inch (19.1 mm). Concrete cover of reinforcement measured from the outside face of the wall shall not be less than 1½ inches (38 mm) for No. 5 bars and smaller, and not less than 2 inches (51 mm) for larger bars.

5. Concrete shall have a specified compressive strength of not less than 2,500 psi (17.2 Mpa) at 28 days.

6. The unfactored axial load per linear foot of wall shall not exceed $1.2tf'_c$, where t is the specific wall thickness in inches.

1805.5.2.2 Masonry foundation walls. Masonry foundation walls shall comply with the following:

1. Vertical reinforcement shall have a minimum yield strength of 60,000 psi (414 Mpa).

2. The specified location of the reinforcement shall equal or exceed the effective depth distance, *d*, noted in Tables 1805.5(2), 1805.5(3) and 1805.5(4) and shall be measured from the face of the soil side of the wall to the center of vertical reinforcement. The reinforcement shall be placed within the tolerances specified in ACI 530.1/ASCE 6/TMS 402, Article 3.4 B7 of the specified location.

3. ~~Concrete shall have a specified compressive strength of not less than 2,500 psi (17.2 Mpa) at 28 days.~~

~~4.~~ Grout shall have a specified compressive strength of not less than 2,000 psi (13.8 Mpa) at 28 days.

~~5.~~ 4. Hollow masonry units shall comply with ASTM C 90 and be installed with Type M or S mortar.

5. The unfactored axial load per linear foot of wall shall not exceed $1.2\ tf'_m$, where t is the specified wall thickness in inches and f'_m is the specified compressive strength of masonry in pounds per square inch.

1805.5.3 Alternative foundation wall reinforcement. In lieu of the reinforcement provisions for masonry foundation walls in Table 1805.5(2), 1805.5(3) or 1805.5(4), alternative reinforcing bar sizes and spacings having an equivalent cross-sectional area of reinforcement per linear foot (mm) of wall are permitted to be used, provided the spacing of reinforcement does not exceed 72 inches (1829 mm) and reinforcing bar sizes do not exceed No. 11.

TABLE 1805.5(1)
PLAIN MASONRY ~~AND PLAIN CONCRETE~~ FOUNDATION WALLS[a, b, c]

PLAIN MASONRY				
		MINIMUM NOMINAL WALL THICKNESS (inches)		
		Soil classes and lateral soil load[a] (psf per foot below natural grade)		
WALL HEIGHT (feet)	HEIGHT OF UNBALANCED BACKFILL (feet)	GW, GP, SW and SP soils 30	GM, GC, SM, SM-SC and ML soils 45	SC, MH, ML-CL and Inorganic CL soils 60
7	4 (or less)	881012	8	8
	5		10	10
	6		12	10 (solid[c])
	7		10 (solid [c])	10 (solid[c])
8	4 (or less)	8	8	8
	5	8	10	12
	6	10	12	12 (solid[c])
	7	12	12 (solid[c])	Note d
	8	10 (solid[c])	12 (solid[c])	Note d
9	4 (or less)	8	8	8
	5	8	10	12
	6	12	12	12 (solid[c])
	7	12 (solid[c])	12 (solid[c])	Note d
	8	12 (solid[c])	Note d	Note d
	9	Note d	Note d	Note d
~~PLAIN CONCRETE~~				
		~~MINIMUM NOMINAL WALL THICKNESS (inches)~~		
		~~Soil classes and lateral soil load[a] (psf per foot below natural grade)~~		
~~WALL HEIGHT (feet)~~	~~HEIGHT OF UNBALANCED BACKFILL (feet)~~	~~GW, GP, SW and SP soils 30~~	~~GM, GC, SM, SM-SC and ML soils 45~~	~~SC, MH, ML-CL and Inorganic CL soils 60~~
~~7~~	~~4 (or less)~~	~~7 ½~~	~~7 ½~~	~~7 ½~~
	~~5~~	~~7 ½~~	~~7 ½~~	~~7 ½~~
	~~6~~	~~7 ½~~	~~7 ½~~	~~8~~
	~~7~~	~~7 ½~~	~~8~~	~~10~~
~~8~~	~~4 (or less)~~	~~7 ½~~	~~7 ½~~	~~7 ½~~
	~~5~~	~~7 ½~~	~~7 ½~~	~~7 ½~~
	~~6~~	~~7 ½~~	~~7 ½~~	~~10~~
	~~7~~	~~7 ½~~	~~10~~	~~10~~
	~~8~~	~~10~~	~~10~~	~~12~~
~~9~~	~~4 (or less)~~	~~7 ½~~	~~7 ½~~	~~7 ½~~
	~~5~~	~~7 ½~~	~~7 ½~~	~~7 ½~~
	~~6~~	~~7 ½~~	~~7 ½~~	~~10~~
	~~7~~	~~7 ½~~	~~10~~	~~10~~
	~~8~~	~~10~~	~~10~~	~~12~~
	~~9~~	~~10~~	~~12~~	~~Note c~~

For SI: 1 inch = 25.4 mm, 1 foot = 304.8 mm, 1 pound per square foot per foot = 0.157 kPa/m.

a. For design lateral soil loads, see Section 1610. Soil classes are in accordance with the Unified Soil Classification System and design lateral soil loads are for moist soil conditions without hydrostatic pressure.
b. Provisions for this table are based on construction requirements specified in Section 1805.5.2.2.
c. Solid grouted hollow units or solid masonry units.
d. A design in compliance with Chapter 21 or reinforcement in accordance with Table 1805.5(2) is required.

~~e. A design in compliance with Chapter 19 is required.~~

TABLE 1805.5(2)

8-INCH ~~CONCRETE AND~~ MASONRY FOUNDATION WALLS WITH REINFORCING WHERE *d* ≥ ~~5~~ 6.75 INCHES a, b, c

{TABLE CONTENTS UNCHANGED}

a. For design lateral soil loads, see Section 1610. Soil classes are in accordance with the Unified Soil Classification System and design lateral soil loads are for moist soil conditions without hydrostatic pressure.

b. Provisions for this table are based on construction requirements specified in Section ~~1805.5.2~~. 1805.5.2.2.

c. For alternative reinforcement, see Section 1805.5.3.

TABLE 1805.5(3)

10-INCH ~~CONCRETE AND~~ MASONRY FOUNDATION WALLS WITH REINFORCING WHERE d ≥ ~~6.75~~ 5 INCHES [a, b, c]

{TABLE CONTENTS UNCHANGED}

a. For design lateral soil loads, see Section 1610. Soil classes are in accordance with the Unified Soil Classification System and design lateral soil loads are for moist soil conditions without hydrostatic pressure.

b. Provisions for this table are based on construction requirements specified in Section ~~1805.5.2~~. 1805.5.2.2.

c. For alternative reinforcement, see Section 1805.5.3.

TABLE 1805.5(4)

12-INCH ~~CONCRETE AND~~ MASONRY FOUNDATION WALLS WITH REINFORCING WHERE d ≥ 8.75 INCHES [a, b, c]

{TABLE CONTENTS UNCHANGED}

a. For design lateral soil loads, see Section 1610. Soil classes are in accordance with the Unified Soil Classification System and design lateral soil loads are for moist soil conditions without hydrostatic pressure.

b. Provisions for this table are based on construction requirements specified in Section ~~1805.5.2~~. 1805.5.2.2.

c. For alternative reinforcement, see Section 1805.5.3.

TABLE 1805.5(5)
CONCRETE FOUNDATION WALLS [b, c]

MAXIMUM WALL HEIGHT (feet)	MAXIMUM UNBALANCED BACKFILL HEIGHT (feet)	VERTICAL REINFORCEMENT AND SPACING (inches)								
		Design lateral soil load[a] (psf per foot of depth)								
		30			45			60		
		Minimum wall thickness (inches)								
		7.5	9.5	11.5	7.5	9.5	11.5	7.5	9.5	11.5
5	4	PC	PC	PC	PC	PC	PC	PC	PC	PC
	5	PC	PC	PC	PC	PC	PC	PC	PC	PC
6	4	PC	PC	PC	PC	PC	PC	PC	PC	PC
	5	PC	PC	PC	PC	PC	PC	PC	PC	PC
	6	PC	PC	PC	PC	PC	PC	PC	PC	PC
7	4	PC	PC	PC	PC	PC	PC	PC	PC	PC
	5	PC	PC	PC	PC	PC	PC	PC	PC	PC
	6	PC	PC	PC	PC	PC	PC	#5 @ 48"	PC	PC
	7	PC	PC	PC	#5 @ 46"	PC	PC	#6 @ 48"	PC	PC
8	4	PC	PC	PC	PC	PC	PC	PC	PC	PC
	5	PC	PC	PC	PC	PC	PC	PC	PC	PC
	6	PC	PC	PC	PC	PC	PC	#5 @ 43"	PC	PC
	7	PC	PC	PC	#5 @ 41"	PC	PC	#6 @ 43"	PC	PC
	8	#5 @ 47"	PC	PC	#6 @ 43"	PC	PC	#6 @32"	#6 @ 44"	PC
9	4	PC	PC	PC	PC	PC	PC	PC	PC	PC
	5	PC	PC	PC	PC	PC	PC	PC	PC	PC
	6	PC	PC	PC	PC	PC	PC	#5 @ 39"	PC	PC
	7	PC	PC	PC	#5 @ 37"	PC	PC	#6 @ 38"	#5 @ 37"	PC
	8	#5 @ 41"	PC	PC	#6 @ 38"	#5 @ 37"	PC	#7 @ 39"	#6 @ 39"	#4 @ 48"
	9d	#6 @ 46"	PC	PC	#7 @ 41"	#6 @ 41"	PC	#7 @ 31"	#7 @ 41"	#6 @ 39"
10	4	PC	PC	PC	PC	PC	PC	PC	PC	PC
	5	PC	PC	PC	PC	PC	PC	PC	PC	PC
	6	PC	PC	PC	PC	PC	PC	#5 @ 37"	PC	PC
	7	PC	PC	PC	#6 @ 48"	PC	PC	#6 @ 35"	#6 @ 48"	PC
	8	#5 @ 38"	PC	PC	#7 @ 47"	#6 @ 47"	PC	#7 @ 35"	#7 @ 48"	#6 @ 45"
	9[d]	#6 @41"	#4 @ 48"	PC	#7 @ 37"	#7 @ 48"	#4 @ 48"	#6 @ 22"	#7 @ 37"	#7 @ 47"
	10[d]	#7 @ 45"	#6 @ 45"	PC	#7 @ 31"	#7 @ 40"	#6 @ 38"	#6 @ 22"	#7 @ 30"	#7 @ 38"

a. For design lateral soil loads for different classes of soil, see Section 1610.

b. Provisions for this table are based on construction requirements specified in Section 1805.5.2.1.

c. "PC" means plain concrete.

d. Where design lateral soil loads from Table 1610.1 are used, the requirements for 30 and 45 psf per foot of depth are not applicable. See Section 1610.

1805.7.1 Limitations. The design procedures outlined in this section are subject to the following limitations:

1. The frictional resistance for structural walls and slabs on silts and clays shall be limited to one-half of the normal force imposed on the soil by the weight of the footing or slab.
2. Posts embedded in earth shall not be used to provide lateral support for structural or nonstructural materials such as plaster, masonry or concrete unless bracing is provided that develops the limited deflection required.

Wood poles shall be treated in accordance with AWPA ~~C2 or C4~~ U1 for sawn timber posts (Commodity Specification A, Use Category 4B) and for AWPA U1 for round timber posts (Commodity Specification B, Use Category 4B) .

1807.3.1 Floors. Floors required to be waterproofed shall be of concrete, designed and constructed to withstand the hydrostatic pressures to which the floors will be subjected.

Waterproofing shall be accomplished by placing a membrane of rubberized asphalt, butyl rubber, fully adhered/fully bonded HDPE or polyolefin composite membrane or not less than 6-mil (0.006 inch; 0.152 mm) polyvinyl chloride with joints lapped not less than 6 inches (152 mm) or other approved materials under the slab. Joints in the membrane shall be lapped and sealed in accordance with the manufacturer's installation instructions.

1809.1.2 Preservative treatment. Timber piles used to support permanent structures shall be treated in accordance with this section unless it is established that the tops of the untreated timber piles will be below the lowest ground-water level assumed to exist during the life of the structure. Preservative and minimum final retention shall be in accordance with AWPA ~~C3~~ U1 (Commodity Specification E, Use Category 4C) for round timber piles and AWPA ~~C24~~ U1 (Commodity Specification A, Use Category 4B) for sawn timber piles. Preservative-treated timber piles shall be subject to a quality control program administered by an approved agency. Pile cutoffs shall be treated in accordance with AWPA M4.

CHAPTER 19
CONCRETE

Copyright © by the American Concrete Institute and reproduced with their consent. All rights reserved.

Italics are used for text within Sections 1902 through 1908 of this code to indicate provisions that differ from ACI 318.

1908.1.5 ACI 318, Section 21.9.5.3. Modify ACI 318, Section 21.9.5.3, by adding a second paragraph to read as follows:

21.9.5.3 - Structural truss elements, struts, ties, diaphragm chords, and collector elements with compressive stresses exceeding $0.2f'_c$ at any section shall have transverse reinforcement, as given in Sections 21.4.4.1 through 21.4.4.3, over the length of the element. The special transverse reinforcement is allowed to be discontinued at a section where the calculated compressive strength is less than $0.15f'_c$. Stresses shall be calculated for the factored forces using a linearly elastic model and gross-section properties of the elements considered.

Where design forces are amplified by the overstrength factor, Ω_o, as required by Section 1620.2.6 of the Building Code, the limit of $0.2f'_c$ shall be increased by $0.5f'_c$ and the limit of $0.15f'_c$ shall be increased to $0.4f'_c$.

~~1908.1.5~~ 1908.1.6 ACI 318, Section 21.10.1.1. Modify ACI 318, Section 21.10.1.1, to read as follows:

21.10.1.1 Foundations resisting earthquake-induced forces or transferring earthquake-induced forces between a structure and the ground shall comply with the requirements of Section 21.10 and other applicable provisions of ACI 318 *unless modified by Chapter 18 of the International Building Code.*

~~1908.1.6~~ 1908.1.7 ACI 318, Section 21.11. Modify ACI Sections 21.11.1 and 21.11.2.2 and add Sections 21.11.5 through 21.11.7 as follows:

21.11.1 Frame members assumed not to contribute to lateral resistance shall be detailed according to Section 21.11.2 or 21.11.3 depending on the magnitude of moments induced in those members when subjected to the design displacement. If effects of design displacements are not explicitly checked, it shall be permitted to apply the requirements of Section 21.11.3. *Slab-column connections shall comply with Sections 21.11.5 through 21.11.7. Conformance to Section 21.11 satisfies the deformation compatibility requirements of Section 9.5.2.2.4.3 of ASCE 7.*

21.11.2.2 Members with factored gravity axial forces exceeding (A_g f'_c /10) shall satisfy Sections 21.4.3, 21.4.4.1(c), 21.4.4.3 and 21.4.5. The maximum longitudinal spacing of ties shall be, so, for the full column height. The spacing, so, shall not be more than six diameters of the smallest longitudinal bar enclosed or 6 inches (152 mm), whichever is smaller. *Lap splices of longitudinal reinforcement in such members need not satisfy Section 21.4.3.2 in structures where the seismic force-resisting system does not include special moment frames.*

21.11.5 Reinforcement to resist punching shear shall be provided in accordance with Sections 21.11.5.1 and 21.11.5.2 at slab column connections where story drift ratio exceeds [0.035 – 0.05 (V_u /φV_c)] except that Sections 21.11.4.1 and 21.11.4.2 need not be satisfied where V_u /φV_c is less than 0.2 or where the story drift ratio is less than 0.005. V_u equals the factored punching shear from gravity load excluding shear stress from unbalanced moment. V_u is calculated for the load combination 1.2D + 1.0L + 0.2S. The load factor on L is permitted to be reduced to 0.5 in accordance with Section 9.2.1(a). In no case shall shear reinforcement be less than that required in Section 11.12 for loads without consideration of seismic effects.

21.11.5.1 — The slab shear reinforcement shall provide Vs not less than $3.5\sqrt{f'_c}$.

21.11.5.2 — Slab shear reinforcement shall extend not less than five times the slab thickness from the face of column.

21.11.6 — Bottom bars or wires within the column strip shall conform to Section 13.3.8.5 except that splices shall be Class B.

21.11.7—Within the effective slab width defined in Section 13.5.3.2, the ratio of nonprestressed bottom reinforcement to gross concrete area shall not be less than 0.004. Where bottom reinforcement is not required to be continuous, such reinforcement shall extend a minimum of five times the slab thickness plus one development length beyond the face of the column or terminated at the slab edge with a standard hook.

~~1908.1.7~~ 1908.1.8 ACI 318, Section 21.13.2. Modify ACI 318, Section 21.13.2, to read as follows:

21.13.2 In connections between wall panels, or between wall panels and the foundation, *yielding shall be restricted to reinforcement.*

CHAPTER 21

MASONRY

2103.2 Clay or shale masonry units. Clay or shale masonry units shall conform to the following standards: ASTM C 34 for structural clay load-bearing wall tile; ASTM C 56 for structural clay nonload-bearing wall tile; ASTM C 62 for building brick (solid masonry units made from clay or shale); ASTM C 1088 for solid units of thin veneer brick; ASTM C 126 for ceramic-glazed structural clay facing tile, facing brick and solid masonry units; ASTM C 212 for structural clay facing tile; ASTM C 216 for facing brick (solid masonry units made from clay or shale); ~~and~~ ASTM C 652 for hollow brick (hollow masonry units made from clay or shale) and ASTM C 1405 for glazed brick (single-fired solid brick units).

Exception: Structural clay tile for nonstructural use in fireproofing of structural members and in wall furring shall not be required to meet the compressive strength specifications. The fire-resistance rating shall be determined in accordance with ASTM E 119 and shall comply with the requirements of Table 602.

2103.9.2 DELETE AND RESERVE.

2104.1.2.5 Grouted masonry. Between grout pours, a horizontal construction joint shall be formed by stopping all wythes at the same elevation and with the grout stopping a minimum of 1½ inches (38 mm) below a mortar joint, except at the top of the wall. Where bond beams occur, the grout pour shall be stopped a minimum of ½ inch (12.7 mm) below the top of the masonry.

2104.1.2.6 All units. Units shall be placed while the mortar is soft and plastic. Any unit disturbed to the extent that the initial bond is broken after initial positioning shall be removed and relaid in fresh mortar.

2104.1.8 Weep holes. Weep holes provided in the outside wythe of masonry walls shall be at a maximum spacing of 33 inches (838 mm) on center (o.c.). Weep holes shall not be less than 3/16 inch (4.8 mm) in diameter. Weep holes shall be located immediately above the flashing.

2109.8.4.6 Exterior finish. Exterior walls constructed of unstabilized adobe units shall have their exterior surface covered with a minimum of two coats of portland cement plaster having a minimum thickness of 3/4 inch (19.1 mm)and conforming to ~~ANSI A42.2~~ ASTM C 926. Lathing shall comply with ~~ANSI A42.3~~ ASTM C 1063. Fasteners shall be spaced at 16 inches (406 mm) o.c. maximum. Exposed wood surfaces shall be treated with an approved wood preservative or other protective coating prior to lath application.

2113.12 Clay ~~F~~ flue lining (installation). Clay ~~F~~ flue liners shall be installed in accordance with ASTM C 1283 and extend from a point not less than 8 inches (203 mm) below the lowest inlet or, in the case of fireplaces, from the top of the smoke chamber to a point above the enclosing walls. The lining shall be carried up vertically, with a maximum slope no greater than 30 degrees (0.52 rad) from the vertical.

~~Fireclay~~ Clay flue liners shall be laid in medium-duty refractory mortar conforming to ASTM C 199, with tight mortar joints left smooth on the inside and installed to maintain an air space or insulation not to exceed the thickness of the flue liner separating the flue liners from the interior face of the chimney masonry walls. Flue lining shall be supported on all sides. Only enough mortar shall be placed to make the joint and hold the liners in position.

CHAPTER 23

WOOD

***2302.1 Definitions.** The following words and terms shall, for the purposes of this chapter, have the meanings shown herein.

~~**ADJUSTED SHEAR RESISTANCE.** The unadjusted shear resistance multiplied by the shear resistance adjustment factors of Table 2305.3.7.2.~~

PERFORATED SHEAR WALL SEGMENT. A section of shear wall with full-height sheathing that meets the height-to-width ~~aspect~~ ratio limits of Section 2305.3.3.

PREFABRICATED WOOD I-JOIST. Structural member manufactured using sawn or structural composite lumber flanges and wood structural panel webs bonded together with exterior exposure adhesives, forming an "I" cross-sectional shape.

STRUCTURAL COMPOSITE LUMBER. Structural member manufactured using wood elements bonded together with exterior adhesives. Examples of structural composite lumber are:

Laminated veneer lumber (LVL). A composite of wood veneer sheet elements with wood fibers primarily oriented along the length of the member.

Parallel strand lumber (PSL). A composite of wood strand elements with wood fibers primarily oriented along the length of the member.

STRUCTURAL GLUED-LAMINATED TIMBER. ~~Any member~~ An engineered, stress-rated product of a timber laminating plant, comprising ~~an assembly~~ assemblies of specially selected and prepared wood laminations ~~of lumber~~ in which the grain of all laminations is approximately parallel longitudinally, ~~in which~~ and the laminations are bonded with adhesives.

~~**UNADJUSTED SHEAR RESISTANCE.** The allowable shear set forth in Table 2306.4.1 where the aspect ratio of any perforated shear wall segment used in calculation of perforated shear wall resistance does not exceed 2:1. Where the aspect ratio of any perforated shear wall segment used in calculation of perforated shear wall resistance is greater than 2:1, but not exceeding 3.5:1, the unadjusted shear resistance shall be the allowable shear set forth in Table 2306.4.1, multiplied by 2*w/h*.~~

WOOD STRUCTURAL PANEL. A panel manufactured from veneers, or wood strands or wafers, or a combination of veneer and wood strands or wafers, bonded together with waterproof synthetic resins or other suitable bonding systems. Examples of wood structural panels are:

Composite panels. A wood structural panel that is ~~made~~ comprised of ~~layers of~~ wood veneer and reconstituted wood-based material and bonded together with waterproof adhesive;

Oriented strand board (OSB). A mat-formed wood structural panel ~~that is a mat-formed product composed~~ comprised of thin rectangular wood strands ~~or wafers~~ arranged in ~~oriented~~ cross-aligned layers with surface layers normally arranged in the long panel direction and bonded with waterproof adhesive; or

Plywood. A wood structural panel comprised of plies of wood veneer arranged in cross-aligned layers. The plies are bonded with a waterproof adhesive that cures on application of heat and pressure.

2303.1 General. Structural sawn lumber, end-jointed lumber, prefabricated wood I-joists, structural glued-laminated timber, wood structural panels, fiberboard sheathing (when used structurally), hardboard siding (when used structurally), particleboard, preservative-treated wood, structural composite lumber, round timber poles and piles, structural log members, fire-retardant-treated wood, hardwood, plywood, wood trusses ~~and~~ joist hangers, nails and staples shall conform to the applicable provisions of this section.

2303.1.1 Sawn ~~L~~lumber. Sawn ~~L~~lumber used for load-supporting purposes, including end-jointed or edge-glued lumber, machine stress-rated or machine evaluated lumber, shall be identified by the grade mark of a lumber grading or inspection agency that has been approved by an accreditation body that complies with DOC PS 20 or equivalent. Grading practices and identification shall comply with rules published by an agency approved in accordance with the procedures of DOC PS 20 or equivalent procedures. In lieu of a grade mark on the material, a certificate of inspection as to species and grade issued by a lumber-grading or inspection agency meeting the requirements of this section is permitted to be accepted for precut, remanufactured or rough-sawn lumber, and for sizes larger than 3 inches (76 mm) nominal thickness.

Approved end-jointed lumber is permitted to be used interchangeably with solid-sawn members of the same species and grade.

2303.1.5 Fiberboard. Fiberboard for its various uses shall conform to ~~ANSI/AHA A194.1 or~~ ASTM C 208. Fiberboard sheathing, when used structurally, shall be so identified by an approved agency as conforming to ~~ANSI/AHA A194.1 or~~ ASTM C 208.

2303.1.5.4 — DELETE IN ITS ENTIRETY.

2303.1.8 Preservative-treated wood. Lumber, timber, plywood, piles and poles supporting permanent structures required by Section 2304.11 to be preservative treated shall conform to the requirements of the applicable AWPA ~~Standard C1, C2, C3, C4, C9, C14, C15, C16, C22, C23, C24, C28, C31, C33~~ U1 and M4, for the species, product, preservative and end use. Preservatives shall ~~conform to~~ be listed in Section 4 of AWPA U1, ~~P1/P13, P2, P5, P8 and P9~~. Lumber and plywood used in wood foundation systems shall conform to Chapter 18.

2303.1.10 Structural log members. Stress grading of structural log members of nonrectangular shape, as typically used in log buildings, shall be in accordance with ASTM D3957. Such structural log members shall be identified by the grade mark of an approved lumber grading or inspection agency. In lieu of a grade mark on the material, a certificate of inspection as to species and grade issued by a lumber-grading or inspection agency meeting the requirements of this section shall be permitted to be accepted.

2303.2.2.2 Lumber. For each species of wood treated, the effect of the treatment and the method of redrying after treatment and exposure to high temperatures and high humidities on the allowable design properties of fire-retardant-treated lumber shall be determined in accordance with ASTM D 5664. The test data developed by ASTM D 5664 shall be used to develop modification factors for use at or near room temperature and at elevated temperatures and

humidity in accordance with ASTM D 6841 ~~an approved method of investigation~~. Each manufacturer shall publish the modification factors for service at temperatures of not less than 80°F (26.7°C) and for roof framing. The roof framing modification factors shall take into consideration the climatological location.

2303.4 — DELETE IN ITS ENTIRETY AND INSERT THE FOLLOWING.

2303.4 Trusses. The design, manufacture and quality assurance of metal-plate-connected wood trusses shall be in accordance with the National Design Standard for Metal Plate Connected Wood Truss Construction, Truss Plate Institute (ANSI/TPI 1). Manufactured trusses shall comply with Section 1704.6 as applicable.

2303.4.1 Truss designer. The individual or organization responsible for the design of trusses.

2303.4.2 Truss design drawing. The written, graphic and pictorial depiction of each individual truss shall be provided to the building official and approved prior to installation. Truss design drawings shall also be provided with the shipment of trusses delivered to the job site. Truss design drawings shall include, at a minimum, the information specified below.

1. Slope or depth, span and spacing;
2. Location of joints;
3. Required bearing widths;
4. Design loads as applicable;
5. Top chord live load (including snow loads);
6. Top chord dead load;
7. Bottom chord live load;
8. Bottom chord dead load;
9. Concentrated loads and their points of application , as applicable;
10. Controlling wind and earthquake loads, as applicable;
11. Adjustments to lumber and metal connector plate design value for conditions of use;
12. Each reaction force and direction;
13. Metal connector plate type, size, thickness or gauge, and the dimensioned location of each metal connector plate except where symmetrically located relative to the joint interface;
14. Lumber size, species and grade for each member;
15. Connection requirements, as applicable for:
    - 15.1 Truss to truss;
    - 15.2 Truss ply to ply; and
    - 15.3 Field splices;
16. Calculated deflection ratio and maximum vertical and horizontal deflection for live and total load, as applicable.
17. Maximum axial tensile and compression forces in the truss members, and
18. Required permanent individual truss member bracing and method per Section 2303.4.5, unless a specific truss member permanent bracing plan for the roof or floor structural system is provided by a registered design professional.

Each individual truss design drawing, where required by the:

- 18.1 Registered design professional, or

18.2. Building official, or

18.3. Statutes of the jurisdiction in which the project is to be constructed,

shall bear the seal and signature of the truss designer.

Exceptions:

1. When a cover sheet/truss index sheet combined into a single cover sheet is attached to the set of truss design drawings for the project, the single sheet/truss index sheet is the only document that needs to be signed and sealed within the truss submittal package.
2. When a cover sheet and a truss index sheet are separately provided and attached to the set of truss design drawings for the project, both the cover sheet and the truss index sheet are the only documents that need to be signed and sealed within the truss submittal package.

2303.4.3 Truss placement diagram. A diagram supplied by the truss manufacturer that identifies the proposed location for each individually designated truss and references the corresponding truss design drawing. The truss placement diagram shall be provided as part of the truss submittal package, and with the shipment of trusses delivered to the job site. Truss placement diagrams shall not be required to bear the seal or signature of the truss designer.

Exception: When the truss placement diagram is prepared under the direct supervision of a registered design professional, it is required to be signed and sealed.

2303.4.4 Truss submittal package. The truss submittal package shall consist of each individual truss design drawing, the truss placement diagram for the project, the truss member permanent bracing specification, and, as applicable, the cover sheet/truss index sheet.

2303.4.5 Truss member permanent bracing. Where permanent bracing of truss members is required on the truss design drawings, it shall be accomplished by one of the following methods:

1. The trusses shall be designed so that the buckling of any individual truss member can be resisted internally by the structure (e.g. buckling member T-bracing, L-bracing, etc.) of the individual truss. The truss individual member buckling reinforcement shall be installed as shown on the truss design drawing or on supplemental truss member buckling reinforcement diagrams provided by the truss designer.
2. Permanent bracing shall be installed using standard industry bracing details that conform with generally accepted engineering practice. Individual truss member continuous lateral bracing location(s) shall be shown on the truss design drawing.

2304.8 Lumber decking.

2304.8.1 General. Lumber decking shall be designed and installed in accordance with the general provisions of this code and the provisions of this section. Each piece shall be square end-trimmed. When random lengths are furnished, each piece shall be square end trimmed across the face so that at least 90% of the pieces will be within 0.5 degrees (0.0087266 rad) of square. The ends of the pieces shall be permitted to be beveled up to 2 degrees (0.034907 rad) from vertical with the exposed face of the piece slightly longer than the back of the piece.

Tongue-and-groove decking shall be installed with the tongues up on sloped or pitched roofs with pattern faces down.

2304.8.2 Layup patterns. Lumber decking is permitted to be laid up following one of five standard patterns as defined in Sections 2304.8.2.1 through 2304.8.2.5. Other patterns are permitted to be used if justified by engineering analysis.

2304.8.2.1 Simple span pattern. All pieces shall be supported by two supports.

2304.8.2.2 Two-span continuous pattern. All pieces shall be supported by three supports, and all end joints shall occur in line on every other support. Supporting members shall be designed to accommodate the load redistribution caused by this pattern.

2304.8.2.3 Combination simple and two-span continuous pattern. Courses in end spans shall be alternating simple span and two span continuous. End joints are staggered in adjacent courses and occur only over supports.

2304.8.2.4 Cantilevered pieces intermixed pattern. The decking shall cover a minimum of three spans. Pieces in the starter course and every third course shall be simple span. Pieces in other courses shall be cantilevered over the supports with end joints at alternate quarter or third points of the spans, and each piece shall bear on at least one support.

2304.8.2.5 Controlled random pattern. The decking shall cover a minimum of three spans. End joints within six inches (152 mm) of being in line in either direction shall be separated by at least two intervening courses. In the end bays, each piece shall bear on at least one support. Where an end joint occurs in an end bay, the next piece in the same course must continue over the first inner support for at least 24 inches (610 mm). The details of the controlled random pattern shall be as described for each decking material in Sections 2304.8.3.3, 2304.8.4.3 or 2304.8.5.3.

For cantilevered spans with the controlled random pattern, special considerations shall be made when the overhang exceeds 18 inches (457 mm), 24 inches (610 mm), or 36 inches (914 mm) for two-inch (51 mm), three-inch (76 mm), and four-inch (102 mm) nominal thickness decking, respectively. The maximum cantilevered length for the controlled random pattern shall be thirty percent of the length of the first adjacent interior span.

For cantilever overhangs within these limits, a structural fascia shall be fastened to each decking piece to maintain a continuously straight roof line. There shall be no end joints in the cantilevered portion or within one-half of the first adjacent interior span.

2304.8.3 Mechanically laminated decking.

2304.8.3.1 General. Mechanically laminated decking consists of square edged dimension lumber laminations set on edge and nailed to the adjacent pieces and to the supports.

2304.8.3.2 Nailing. The length of nails connecting laminations shall not be less than two and one-half times the net thickness of each lamination. Where deck supports are 48 inches (1219 mm) on center (o.c.) or less, side nails shall be spaced not more than 30 inches (762 mm) o.c. alternately near top and bottom edges, and staggered one third of the spacing in adjacent laminations. Where supports are spaced more than 48 inches (1219 mm) o.c., side nails shall be spaced not more than 18 inches (457 mm) o.c. alternately near top and bottom edges and staggered one-third of the spacing in adjacent laminations. Two side nails shall be used at each end of butt-jointed pieces.

Laminations shall be toenailed to supports with 20d or larger common nails. Where the supports are 48 inches (1219 mm) o.c. or less, alternate laminations shall be toenailed to alternate supports; where supports are spaced more than 48 inches (1219 mm) o.c., alternate laminations shall be toenailed to every support.

2304.8.3.3 Controlled random pattern. There shall be a minimum distance of 24 inches (610 mm) between end joints in adjacent courses. The pieces in the first and second courses shall bear on at least two supports with end joints in these two courses occurring on alternate supports. A maximum of seven intervening courses shall be permitted before this pattern is repeated.

2304.8.4 Two-inch sawn tongue-and-groove decking.

2304.8.4.1 General. Two-inch (51 mm) decking shall have a maximum moisture content of 15%. Decking shall be machined with a single tongue-and-groove pattern. Each deck piece shall be nailed to each support as required.

2304.8.4.2 Nailing. Each piece of decking shall be toenailed at each support with one 16d common nail through the tongue and face-nailed with one 16d common nail.

2304.8.4.3 Controlled random pattern. There shall be a minimum distance of 24 inches (610 mm) between end joints in adjacent courses. The pieces in the first and second courses shall bear on at least two supports with end joints in these two courses occurring on alternate supports. A maximum of seven intervening courses shall be permitted before this pattern is repeated.

2304.8.5 Three- and four-inch sawn tongue-and-groove decking.

2304.8.5.1 General. Three-inch (76 mm) and four-inch (102 mm) decking shall have a maximum moisture content of 19%. Decking shall be machined with a double tongue-and-groove pattern. Deck pieces shall be interconnected and fastened to the supports as required.

2304.8.5.2 Nailing. Each piece shall be toenailed at each support with one 40d common nail and face-nailed with one 60d common nail. Courses shall be spiked to each other with 8 inch (203 mm) spikes at intervals not to exceed 30 inches (762 mm) through predrilled edge holes penetrating to a depth of approximately 4 inches (102 mm) and with one spike at a distance not exceeding 10 inches (254 mm) from the end of each piece.

2304.8.5.3 Controlled random pattern. There shall be a minimum distance of 48 inches (1219 mm) between end joints in adjacent courses. Pieces not bearing over a support are permitted to occur in interior bays provided the adjacent pieces in the same course continue over the support for at least 24 inches (610 mm). This condition shall not occur more than once in every six courses in each interior bay.

2303.6 Nails and staples. Nails and staples shall conform to requirements of ASTM F 1667. Nails used for framing and sheathing connections shall have minimum average bending yield strengths as follows: 80 kips per square inch (ksi) (551 MPa) for shank diameters larger than 0.177 inch (4.50 mm) but not larger than 0.254 inch (6.45 mm), 90 ksi (620 MPa) for shank diameters larger than 0.142 inch (3.61 mm) but not larger than 0.177 inch (4.50 mm) and 100 ksi (689 MPa) for shank diameters of at least 0.099 inch (2.51 mm) but not larger than 0.142 inch (3.61 mm) ~~or less~~.

TABLE 2304.9.1
FASTENING SCHEDULE
(NO CHANGE TO TABLE)

g. Fasteners spaced 3 inches on center at exterior edges and 6 inches on center at intermediate supports, when used as structural sheathing. Spacing shall be 6 inches on center on the edges and 12 inches on center at intermediate supports for non-structural applications.

2304.9.5 Fasteners in preservative-treated and fire-retardant-treated wood. Fasteners for preservative-treated and fire-retardant-treated wood shall be of hot-dipped or mechanically deposited zinc-coated galvanized steel, stainless steel, silicon bronze or copper. The coating weights for zinc-coated fasteners shall be in accordance with ASTM A 153 or ASTM B 695, Class 55, minimum.

Exception: Fasteners other than nails, timber rivets, wood screws and lag screws shall be permitted to be of mechanically deposited zinc coated steel with coating weights in accordance with ASTM B 695, Class 55 minimum.

Fastenings for wood foundations shall be as required in AF&PA Technical Report No. 7.

2304.11.2.2 ~~Framing~~ Wood supported by exterior foundation walls. Wood framing members, including wood sheathing, which rest on exterior foundation walls and are less than 8 inches (203 mm) from exposed earth shall be of naturally durable or preservative-treated wood.

2304.11.2.3 Exterior walls below grade. Wood framing members and furring strips attached directly to the interior of exterior masonry or concrete walls below grade shall be of approved naturally durable or preservative-treated wood.

~~**2304.11.2.3**~~ **2304.11.2.4 Sleepers and sills.** Sleepers and sills on a concrete or masonry slab that is in direct contact with earth shall be of naturally durable or preservative-treated wood.

~~**2304.11.2.4**~~ **2304.11.2.5 Girder ends.** The ends of wood girders entering exterior masonry or concrete walls shall be provided with a 1/2-inch (12.7 mm) air space on top, sides and end, unless naturally durable or preservative-treated wood is used.

~~**2304.11.2.5**~~ **2304.11.2.6 Wood siding.** Clearance between wood siding and earth on the exterior of a building shall not be less than 6 inches (152 mm) except where siding, sheathing and wall framing are of naturally durable or preservative-treated wood.

~~**2304.11.2.6**~~ **2304.11.2.7 Posts or columns.** Posts or columns supporting permanent structures and supported by a concrete or masonry slab or footing that is in direct contact with the earth shall be of naturally durable or preservative-treated wood.

Exceptions:

1. Posts or columns that are either exposed to the weather or located in basements or cellars, supported by concrete piers or metal pedestals projected at least 1 inch (25 mm) above the slab or deck and 6 inches (152 mm) above exposed earth, and are separated therefrom by an impervious moisture barrier.
2. Posts or columns in enclosed crawl spaces or unexcavated areas located within the periphery of the building, supported by a concrete pier or metal pedestal at a height greater than 8 inches (203 mm) from exposed ground, and are separated therefrom by an impervious moisture barrier.

2304.11.4.1 Posts or columns. Posts and columns supporting permanent structures that are embedded in concrete that is in direct contact with the earth, ~~or~~ embedded in concrete that is exposed to the weather, or in direct contact with the earth, shall be of preservative-treated wood.

2305.1 General. Structures using wood shear walls and diaphragms to resist wind, seismic and other lateral loads shall be designed and constructed in accordance with the provisions of this section. Alternatively, compliance with the AF&PA SDPWS, as modified by Section 2305.1.1, shall be permitted subject to the limitations therein and the limitations of this code.

2305.1.1 Modifications to AF&PA SDPWS Section 4.3.3.2. Modify Section 4.3.3.2 to read as follows:

4.3.3.2 Summing Shear Capacities. The shear values for shear panels of different capacities applied to the same face of the wall are not cumulative. The shear values for material of the same type and capacity applied to both faces of the same wall are cumulative. Where the material capacities are not equal, the allowable shear shall be either two times the smaller shear capacity or the capacity of the stronger side, whichever is greater. Summing shear capacities of dissimilar materials applied to opposite faces of the same wall line is not allowed.

Exception: For wind design, the combined nominal unit shear capacity, v_{wc}, of shear walls sheathed with a combination of wood structural panels, hardboard panel siding, or structural fiberboard on one side and gypsum wallboard on the opposite side shall equal the sum of the sheathing capacities of each side separately.

~~**2305.1.1**~~ **2305.1.2 Shear resistance based on principles of mechanics.** Shear resistance of diaphragms and shear walls are permitted to be calculated by principles of mechanics using values of fastener strength and sheathing shear resistance.

~~2305.1.2~~ 2305.1.3 **Framing.** Boundary elements shall be provided to transmit tension and compression forces. Perimeter membersat openings shall be provided and shall be detailed to distribute the shearing stresses. Diaphragm and shear wall sheathing shall not be used to splice boundary elements. Diaphragm chords and collectors shall be placed in, or tangent to, the plane of the diaphragm framing unless it can be demonstrated that the moments, shears and deformations, considering eccentricities resulting from other configurations can be tolerated without exceeding the adjusted resistance and drift limits.

~~2305.1.2.1~~ 2305.1.3.1 **Framing members.** Framing members shall be at least 2 inch (51 mm) nominal width. In general, adjoining panel edges shall bear and be attached to the framing members and butt along their centerlines. Nails shall be placed not less than 3/8 inch (9.5 mm) from the panel edge, not more than 12 inches (305 mm) apart along intermediate supports, and 6 inches (152 mm) along panel edge bearings, and shall be firmly driven into the framing members.

~~2305.1.3~~ 2305.1.4 **Openings in shear panels.** Openings in shear panels that materially affect their strength shall be fully detailed on the plans, and shall have their edges adequately reinforced to transfer all shearing stresses.

~~2305.1.4~~ 2305.1.5 **Shear panel connections.** Positive connections and anchorages, capable of resisting the design forces, shall be provided between the shear panel and the attached components. In Seismic Design Category D, E or F, toenails shall not be used to transfer lateral forces in excess of 150 pounds per foot (2189 N/m) from diaphragms to shear walls, drag struts (collectors) or other elements, or from shear walls to other elements.

~~2305.1.5~~ 2305.1.6 **Wood members resisting horizontal seismic forces contributed by masonry and concrete.** Wood shear walls, diaphragms, horizontal trusses and other members shall not be used to resist horizontal seismic forces contributed by masonry or concrete construction in structures over one story in height.

Exceptions:

1. Wood floor and roof members are permitted to be used in horizontal trusses and diaphragms to resist horizontal seismic forces contributed by masonry or concrete construction (including those due to masonry veneer, fireplaces and chimneys) provided such forces do not result in torsional force distribution through the truss or diaphragm.
2. Wood structural panel sheathed shear walls are permitted to be used to provide resistance to seismic forces contributed by masonry or concrete construction in two-story structures of masonry or concrete construction, provided the following requirements are met:
   - 2.1. Story-to-story wall heights shall not exceed 12 feet (3658 mm).
   - 2.2. Diaphragms shall not be designed to transmit lateral forces by rotation. Diaphragms shall not cantilever past the outermost supporting shear wall.
   - 2.3. Combined deflections of diaphragms and shear walls shall not permit story drift of supported masonry or concrete walls to exceed the limit of Section 1617.3.
   - 2.4. Wood structural panel sheathing in diaphragms shall have unsupported edges blocked. Wood structural panel sheathing for both stories of shear walls shall have unsupported edges blocked and, for the lower story, shall have a minimum thickness of 15/32 inch (11.9 mm).
   - 2.5. There shall be no out-of-plane horizontal offsets between the first and second stories of wood structural panel shear walls.

2305.2.4 Construction. ~~Shear panels~~ Wood diaphragms shall be constructed of wood structural panels, manufactured with exterior glue, not less than 4 feet by 8 feet (1219 mm by 2438 mm),except at boundaries and changes in framing where minimum sheet dimension shall be 24 inches (610 mm) unless all edges of the undersized sheets are supported by and fastened to framing members or blocking . ~~Boundary elements shall be connected at corners.~~ Wood structural panel thickness for horizontal diaphragms shall not be less than set forth in Tables 2304.7(3), 2304.7(4) and 2304.7(5) for corresponding joist spacing and loads. ~~, except that 1/4 inch (6.4 mm) is permitted to be used where perpendicular loads permit. Sheet-type sheathing shall be arranged so that the width of a sheet in a shear wall shall not be less than 2 feet (610 mm).~~

***2306.1 Allowable stress design.** The structural analysis and construction of wood elements in structures using allowable design methods shall be in accordance with the following applicable standards:

American Institute of Timber Construction.

AITC 104 Typical Construction Details

AITC 110 Standard Appearance Grades for Structural Glued Laminated Timber

AITC 112 Standard for Tongue-and-Groove Heavy Timber Roof Decking

AITC 113 Standard for Dimensions of Structural Glued Laminated Timber

AITC 117 Standard Specifications for Structural Glued Laminated Timber of Softwood Species

AITC 119 Structural Standard Specifications for Glued Laminated Timber of Hardwood Species

AITC A190.1 Structural Glued Laminated Timber

AITC 200 Inspection Manual

~~AITC 500 Determination of Design Values for Structural Glued Laminated Timber~~

APA—The Engineered Wood Association.

~~Plywood~~ Panel Design Specification

Plywood Design Specification Supplement 1 - Design & Fabrication of Plywood Curved Panels.

Plywood Design Specification Supplement 2 - Design & Fabrication of Glued Plywood-Lumber beams.

Plywood Design Specification Supplement 3 - Design & Fabrication of Plywood Stressed-Skin Panels.

Plywood Design Specification Supplement 4 - Design & Fabrication of Plywood Sandwich Panels.

Plywood Design Specification Supplement 5 - Design & Fabrication of All-Plywood Beams.

EWS T300 Glulam Connection Details

EWS S560 Field Notching and Drilling of Glued Laminated Timber Beams

EWS S475 Glued Laminated Beam Design Tables

EWS X450 Glulam in Residential Construction

EWS X440 Product and Application Guide: Glulam

EWS R540 Builders Tips: Proper Storage and Handling of Glulam Beams

***NOTE: STANDARDS NOT SHOWN HERE REMAIN AS SET FORTH IN THE 2003 INTERNATIONAL BUILDING CODE.**

2306.1.4 Lumber decking. The capacity of lumber decking arranged according to the patterns described in Section 2304.8.2 shall be the lesser of the capacities determined for flexure and deflection according to the formulas in Table 2306.1.4.

TABLE 2306.1.4
ALLOWABLE LOADS FOR LUMBER DECKING

PATTERN	ALLOWABLE AREA LOAD[a,b]	
	Flexure	Deflection
Simple span	$\sigma_b = \frac{8F_b'}{l^2}\frac{d^2}{6}$	$\sigma_\Delta = \frac{384\Delta E'}{5l^4}\frac{d^3}{12}$
Two-span continuous	$\sigma_b = \frac{8F_b'}{l^2}\frac{d^2}{6}$	$\sigma_\Delta = \frac{185\Delta E'}{l^4}\frac{d^3}{12}$
Combination simple-and-two span continuous	$\sigma_b = \frac{8F_b'}{l^2}\frac{d^2}{6}$	$\sigma_\Delta = \frac{131\Delta E'}{l^4}\frac{d^3}{12}$
Cantilevered pieces intermixed	$\sigma_b = \frac{20F_b'}{3l^2}\frac{d^2}{6}$	$\sigma_\Delta = \frac{105\Delta E'}{l^4}\frac{d^3}{12}$
Controlled random layup		
Mechanically laminated decking	$\sigma_b = \frac{20F_b'}{3l^2}\frac{d^2}{6}$	$\sigma_\Delta = \frac{100\Delta E'}{l^4}\frac{d^3}{12}$
2 inch decking	$\sigma_b = \frac{20F_b'}{3l^2}\frac{d^2}{6}$	$\sigma_\Delta = \frac{100\Delta E'}{l^4}\frac{d^3}{12}$
3 inch and 4 inch decking	$\sigma_b = \frac{20F_b'}{3l^2}\frac{d^2}{6}$	$\sigma_\Delta = \frac{116\Delta E'}{l^4}\frac{d^3}{12}$

a. σ_b = allowable total uniform load limited by bending;

σ_Δ = allowable total uniform load limited by deflection.

b. d = actual decking thickness.

l = span of decking

Fb' = allowable bending stress adjusted by applicable factors.

E' = modulus of elasticity adjusted by applicable factors.

2306.3.2 Wood structural panel diaphragms. Structural panel diaphragms with wood structural panels are permitted to be used to resist horizontal forces not exceeding those set forth in Table 2306.3.1 or 2306.3.2 or calculated by principles of mechanics without limitations by using values for fastener strength in the NDS structural design properties for wood structural panels based on DOC PS-1 and DOC PS-2 or ~~plywood~~ wood structural panel design properties given in the APA ~~Plywood~~ Panel Design Specification.

2306.4.1 Wood structural panel shear walls. The allowable shear capacities for wood structural panel shear walls shall be in accordance with Table 2306.4.1. These capacities are permitted to be increased 40 percent for wind design. Shear walls are permitted to be calculated by principles of mechanics without limitations by using values for nail strength given in the NDS and wood structural panel design properties given in the APA~~/PDS~~ Panel Design Specification.

2307.1 Load and resistance factor design (LRFD). The structural analysis and construction of wood elements and structures using load and resistance factor design (LRFD) methods shall be in accordance with ~~ASCE 16~~ AF&PA NDS.

2308.1 General. The requirements of this section are intended for conventional light-frame construction. Other methods are permitted to be used provided a satisfactory design is submitted showing compliance with other provisions of this code. Interior nonload-bearing partitions, ceilings and curtain walls of conventional light-frame construction are not subject to the limitations of this section. Alternatively, compliance with the following standard shall be permitted subject to the limitations therein and the limitations of this code: *American Forest and Paper Association (AF&PA) Wood Frame Construction Manual for One- and Two-Family Dwellings* (WFCM). Detached one- and two-family dwellings and multiple single-family dwellings (townhouses) not more than three stories in height with a separate means of egress shall be permitted to be designed by the *International Residential Code.*

2308.1.1 Portions exceeding limitations of conventional construction. When portions of a building of otherwise conventional construction exceed the limits of Section 2308.2, these portions and the supporting load path shall be designed in accordance with accepted engineering practice and the provisions of this code. For the purposes of this section, the term “portions” shall mean parts of a building containing volume and area, such as a room or a series of rooms.

2308.2.1 Basic wind speed greater than 100 mph (3-second gust). Where the basic wind speed exceeds 100 mph (3-second gust), the provisions of either the *AF&PA Wood Frame Construction Manual for One- and Two-Family Dwellings* (WFCM), or the SBCCI *Standard for Hurricane-Resistant Residential Construction* (SSTD 10), or Appendix K of this code are permitted to be used.

CHAPTER 24

GLASS AND GLAZING

2403.1 Identification. Each pane shall bear the manufacturer's ~~label~~ mark designating the type and thickness of the glass or glazing material. The identification shall not be omitted unless approved and an affidavit is furnished by the glazing contractor certifying that each light is glazed in accordance with approved construction documents that comply with the provisions of this chapter. Safety glazing shall be identified in accordance with Section 2406.2.

Each pane of tempered glass, except tempered spandrel glass, shall be permanently identified by the manufacturer. The identification ~~label~~ mark shall be acid etched, sand blasted, ceramic fired, laser burned, an embossed or shall be of a type that once applied cannot be removed without being destroyed.

Tempered spandrel glass shall be provided with a removable paper marking by the manufacturer.

2404.1 Vertical glass. Glass sloped 15 degrees (0.26 rad) or less from vertical in windows, curtain and window walls, doors and other exterior applications shall be designed to resist the wind loads in Section 1609 for components and cladding. Glass in glazed curtain walls, glazed storefronts and glazed partitions shall meet the seismic requirements of ASCE 7, Section 9.6.2.10. ~~Glazing firmly supported on all four edges is permitted to be designed by the following provisions. Where the glass is not firmly supported on all four edges, analysis or test data ensuring safe performance for the specific installation shall be prepared by a registered design professional.~~ The load resistance of glass under uniform load shall be determined in accordance with ASTM E 1300.

The design of vertical glazing shall be based on the following equation:

$F_{gw} \leq F_{ga}$ **(Equation 24-1)**

where:

F_{gw} is the wind load on the glass computed in accordance with Section 1609 and F_{ga} is the ~~maximum allowable~~ short duration load on the glass ~~computed by the following formula~~ as determined in accordance with ASTM E 1300.

~~$F_{ga} = c_4 F_{ge}$ **(Equation 24-2)**~~

~~where:~~

~~F_{ge} = Maximum allowable equivalent load, pounds per square foot (psf) (kN/m^2) determined from Figures 2404(1) through 2404(12) for the applicable glass dimensions and thickness.~~

~~c_4 = Factor determined from Table 2404.1 based on glass type.~~

***TABLE 2404.1 — DELETE IN ITS ENTIRETY**

2404.2 Sloped glass. Glass sloped more than 15 degrees (0.26 rad) from vertical in skylights, sunrooms, sloped roofs and other exterior applications shall be designed to resist the most critical of the following combinations of loads.

$F_g = W_o - D$ **(Equation 24-~~3~~ 2)**

$F_g = W_i + D + 0.5\,S$ **(Equation 24-~~4~~ 3)**

$F_g = 0.5W_i + D + S$ **(Equation 24-~~5~~ 4)**

where:

D = Glass dead load psf(kN/m^2)

For glass sloped 30 degrees (0.52 rad) or less from horizontal,

D = 13 t_g (For SI: 0.0245 t_g)

For glass sloped more than 30 degrees (0.52 rad) from horizontal,

D = 13 t_g cos θ (For SI: 0.0245 t_g cos θ).

F_g = Total load, psf (kN/m^2) on glass.

S = Snow load, psf (kN/m^2) as determined in Section 1608.

t_g = Total glass thickness, inches(mm)of glass panes and plies.

Wi = Inward wind force, psf (kN/m^2) as calculated in Section 1609.

W_o = Outward wind force, psf (kN/m^2) as calculated in Section 1609.

θ = Angle of slope from horizontal.

Exception: Unit skylights shall be designed in accordancewith Section 2405.5.

The design of sloped glazing shall be based on the following equation:

$F_g \leq F_{ga}$ **(Equation 24-~~6~~ 5)**

where F_g is the ~~maximum~~ total load on the glass determined from Equations 24-~~3~~ 2 through 24-~~5~~4, ~~and F_{ga} is the maximum allowable load on the glass~~ and F_{ga} is the short duration load resistance of the glass as determined according to ASTM E1300 for Equations 24-2 and 24-3; or the long duration load resistance of the glass as determined according to ASTM E 1300 for Equation 24-4.

~~If F_g is determined by Equation 24-3 or 24-4 above, F_{ga} shall be computed as for vertical glazing in Section 2404.1. If F_g is determined by Equation 24-5 above, F_{ga} shall be computed by the following equation:~~

~~$F_{ga} = c_2 F_{ge}$~~ ~~**(Equation 24-7)**~~

~~where:~~

~~F_{ge} = Maximum allowable equivalent load (psf) determined from Figures 2404(1) through 2404(12) for the applicable glass dimensions and thickness.~~

~~c_2 = Factor determined from Table 2404.2 based on glass type.~~

***TABLE 2404.2 — DELETE IN ITS ENTIRETY**

***Figures 2404(1)** through **2404(12) — DELETE IN THEIR ENTIRETY**

2404.3.1 Vertical wired glass. Wired glass sloped 15 degrees (0.26 rad) or less from vertical in windows, curtain and window walls, doors and other exterior applications shall be designed to resist the wind loads in Section 1609 for components and cladding according to the following formula:

$F_{gw} < 0.5\ F_{ge}$ **(Equation 24-6)**

where F_{gw} is the wind load on the glass computed per Section 1609 and F_{ge} is the nonfactored load from ASTM E 1300 using a thickness designation for monolithic glass that is not greater than the thickness of wired glass.

2404.3.2 Sloped wired glass. Wired glass sloped more than 15 degrees (0.26 rad) from vertical in skylights sunspaces, sloped roofs and other exterior applications shall be designed to resist the most critical of the combinations of loads from Section 2404.2. For Equations 24-2 and 24-3:

$F_g < 0.5\ F_{ge}$ **(Equation 24-7)**

For Equation 24-4

$F_g < 0.3\ F_{ge}$ **(Equation 24-8)**

where F_g is total load on the glass and F_{ge} is the nonfactored load from ASTM E 1300.

2404.3.3 Vertical patterned glass. Patterned glass sloped 15 degrees (0.26 rad) or less from vertical in windows, curtain and window walls, doors and other exterior application shall be designed to resist the wind loads in Section 1609 for components and cladding according to the following formula:

$F_{gw} < 1.0\ F_{ge}$ **(Equation 24-9)**

where F_{gw} is the wind load on the glass computed per Section 1609 and F_{ge} is the nonfactored load from ASTM E 1300. The value for patterned glass shall be based on the thinnest part of the glass. Interpolation between nonfactored load charts in ASTM E 1300 shall be permitted.

2404.3.4 Sloped pattern glass. Patterned glass sloped more than 15 degrees (0.26 rad) from vertical in skylights, sunspaces, sloped roofs and other exterior applications shall be designed to resist the most critical of the combinations of loads from Section 2404.2. For load Equations 24-2 and 24-3:

$F_g < 1.0\ F_{ge}$ **(Equation 24-10)**

For Equation 24-4:

$F_g < 0.6\ F_{ge}$ **(Equation 24-11)**

where F_g is total load on the glass and F_{ge} is the nonfactored load from ASTM E 1300. The value for patterned glass shall be based on the thinnest part of the glass. Interpolation between the nonfactored load charts in ASTM E 1300 shall be permitted.

2403.5 Vertical sandblasted glass. Sandblasted glass sloped 15 degrees (0.26 rad) or less from vertical in windows, curtain and window walls, doors, and other exterior applications shall be designed to resist the wind loads in Section 1609 for components and cladding according to the following formula:

$F_g < 0.5\ F_{ge}$ **(Equation 24-12)**

where F_g is total load on the glass and F_{ge} is the nonfactored load from ASTM E 1300. The value for sandblasted glass is for moderate levels of sandblasting.

2404.4 Other designs. For designs outside the scope of this section, an analysis or test data for the specific installation shall be prepared by a registered design professional.

2405.5 Unit skylights. Unit skylights shall be tested and labeled as complying with AAMA/WDMA/CSA 101/I.S.2/A440. ~~*101/I.S.2/NAFS Voluntary Performance Specification for Windows, Skylights and Glass.*~~ The label shall state the name of the manufacturer, the approved labeling agency, the product designation and the performance grade rating as specified in AAMA/WDMA/CSA 101/I.S.2/A440 ~~101/I.S.2/NAFS~~. If the product manufacturer has chosen to have the performance grade of the skylight rated separately for positive and negative design pressure, then the label shall state both performance grade ratings as specified in AAMA/WDMA/CSA 101/I.S.2/A440 ~~101/I.S.2/NAFS~~ and the skylight shall comply with Section 2405.5.2. If the skylight is not rated separately for positive and negative pressure, then the performance grade rating shown on the label shall be the performance grade rating determined in accordance with AAMA/WDMA/CSA 101/I.S.2/A440 ~~101/I.S.2/NAFS~~ for both positive and negative design pressure, and the skylight shall conform to Section 2405.5.1.

2406.1 Human impact loads. Individual glazed areas, including glass mirrors, in hazardous locations as defined in Section 2406.3 shall comply with Sections 2406.1.1 through 2406.1.~~5~~ 4.

~~**2406.1.2 Wired glass.** In other than Group E, wired glass installed in fire doors, fire windows and view panels in fire-resistant walls shall be permitted to comply with ANSI Z97.1.~~

~~**2406.1.3**~~ **Plastic glazing.** Plastic glazing shall meet the weathering requirements of ANSI Z97.1.

~~**2406.1.4**~~ **2406.1.3 Glass block.** Glass-block walls shall comply with Section 2101.2.5.

~~**2406.1.5**~~ **2406.1.4 Louvered windows and jalousies.** Louvered windows and jalousies shall comply with Section 2403.5.

2406.2 Identification of safety glazing. Except as indicated in Section 2406.2.1 each pane of safety glazing installed in hazardous locations shall be identified by a ~~label~~ manufacturer's designation specifying ~~the labeler~~ who applied the designation , ~~whether~~ the manufacturer or installer, and the safety glazing standard with which it complies, as well as the information specified in section 2403.1. The ~~label~~ designation shall be acid etched, sand blasted, ceramic fired, laser etched, ~~or~~ ~~an~~ embossed ~~mark~~, or shall be of a type that once applied cannot be removed without being destroyed. A label as defined in Section 1702.1 and meeting the requirements of this section shall be permitted in lieu of the manufacturer's designation.

Exceptions:

1. For other than tempered glass, ~~labels~~ manufacturer's designations are not required, provided the building official approves the use of a certificate, affidavit or other evidence confirming compliance with this code.
2. Tempered spandrel glass is permitted to be identified by the manufacturer with a removable paper ~~label~~ designation.

SECTION 2409

DELETE TEXT IN ITS ENTIRETY AND INSERT THE FOLLOWING:

GLASS IN ELEVATOR HOISTWAY

2409.1 Glass in elevator enclosures. Glass in elevator enclosures shall be laminated glass conforming to ANSI Z97.1, 16CFR Part 1201. Markings as specified in the applicable standard shall be on each separate piece of glass and shall remain visible after installation.

CHAPTER 25

GYPSUM BOARD AND PLASTER

2509.2 Base for tile. ~~When gypsum board is used as a base for tile or wall panels for tubs, shower or water closet compartment walls, water-resistant gypsum backing board shall be used as a substrate.~~ Cement, fiber-cement, or glass mat gypsum backers in compliance with ASTM C 1288, C 1325 or C 1178 and installed in accordance with manufacturer recommendations shall be used as a base for wall tile in tub and shower areas and wall and ceiling panels in shower areas. Water-resistant gypsum backing board shall be used as a base for tile in water closet compartment walls when installed in accordance with GA-216 or ASTM C 840 and manufacturer recommendations. Regular gypsum wallboard is permitted under tile or wall panels in other wall and ceiling areas when installed in accordance with GA-216 or ASTM C 840.

2510.5.2.1 Use of gypsum board as a backing board. Gypsum lath or gypsum wallboard shall not be used as a backing for cement plaster.

Exception: Gypsum lath or gypsum wallboard is permitted, with a ~~weather-resistant~~ water-resistive barrier, as a backing for self-furred metal lath or self-furred wire fabric lath and cement plaster where either of the following conditions occur:

1. On horizontal supports of ceilings or roof soffits.
2. On interior walls.

2510.5.2.2 Use of gypsum sheathing backing. Gypsum sheathing is permitted as a backing for metal or wire fabric lath and cement plaster on walls. A ~~weather-resistant~~ water-resistive barrier shall be provided in accordance with Section 2510.6.

2510.6 ~~Weather-resistant~~ Water-resistive barriers. ~~Weather-resistant~~ Water-resistive barriers shall be installed as required in Section 1404.2 and, where applied over wood-based sheathing, shall include a ~~weather-resistant~~ water-resistive vapor-permeable barrier with a performance at least equivalent to two layers of Grade D paper.

Exception: Where the water-resistive barrier that is applied over wood-based sheathing has a water resistance equal to or greater than that of 60-minute Grade D paper and is separated from the stucco by an intervening, substantially nonwater-absorbing layer or drainage space.

2603.4.1.12 Interior signs. Foam plastic used for interior signs in covered mall buildings in accordance with Section 402.14 shall be permitted without a thermal barrier. Foam plastic signs which are not affixed to interior building sufaces shall comply with Chapter 8 of the *Fire Code.*

2603.8 Protection against termites. In areas where the probability of termite infestation is very heavy in accordance with Figure 2603.8, extruded and expanded polystyrene, polyisocyanurate and other foam plastics shall not be installed on the exterior face or under interior or exterior foundation walls or slab foundations located below grade. The clearance between foam plastics installed above grade and exposed earth shall be at least 6 inches (152 mm).

Exceptions:

1. Buildings where the structural members of walls, floors, ceilings and roofs are entirely of noncombustible materials or preservatively treated wood.
2. An approved method of protecting the foam plastic and structure from subterranean termite damage is provided.
3. On the interior side of basement walls.

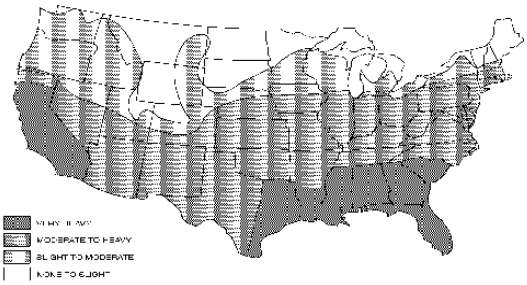

FIGURE 2603.8

TERMITE INFESTATION PROBABILITY MAP

~~**2603.8**~~ **2603.9 Special approval.** Foam plastic shall not be required to comply with the requirements of Sections 2603.4 through ~~2603.7~~ 2603.8, where specifically approved based on large-scale tests such as, but not limited to, NFPA 286 (with the acceptance criteria of Section 803.2), FM 4880, UL 1040~~, NFPA 286~~ or UL 1715. Such testing shall be related to the actual end-use configuration and be performed on the finished manufactured foam plastic assembly in the maximum thickness intended for use. ~~Foam plastics that are used as interior finish on the basis of special tests shall also conform to the flame spread requirements of Chapter 8.~~ Assemblies tested shall include seams, joints and other typical details used in the installation of the assembly and shall be tested in the manner intended for use.

2606.7.5 Electrical luminaires ~~lighting fixtures~~. Light-transmitting plastic panels and light-diffuser panels that are installed in approved electrical lighting fixtures shall comply with the requirements of Chapter 8 unless the light-transmitting plastic panels conform to the requirements of Section 2606.7.2. The area of approved light-transmitting plastic materials that are used in required exits or corridors shall not exceed 30 percent of the aggregate area of the ceiling in which such panels are installed, unless the building is equipped throughout with an automatic sprinkler system in accordance with Section 903.3.1.1.

CHAPTER 27
ELECTRICAL

2702.2.5 DELETE AND RESERVE.

CHAPTER 28

MECHANICAL SYSTEMS

SECTION 2802
FACTORY BUILT CHIMNEYS AND FIREPLACES

2802.1 Factory built chimneys and fireplaces. Factory built chimneys and factory built fireplaces shall be listed and shall be installed in accordance with the terms of their listings and the manufacturers' instructions as specified in the Mechanical Code.

CHAPTER 29
PLUMBING SYSTEMS

Delete Table 2902.1 in its entirety and replace with the following table.

TABLE 2902.1
MINIMUM NUMBER OF REQUIRED PLUMBING FACILITIES

No.	Classification	Use Group	Description	Water Closets[d]		Lavatories		Drinking Fountains[e]	Bath or Shower
				Male	Female	Male	Female		
1	Assembly	A-1	Theaters usually with fixed seats and other buildings for the performing arts and motion pictures	1 per 125	1 per 60	1 per 200		1 per 500	
		A-2	Nightclubs, bars, taverns, dance halls and buildings for similar purposes	1 per 40	1 per 40	1 per 75		1 per 500	
			Restaurants, banquet halls, and food courts	1 per 75	1 per 75	1 per 200		1 per 500	

		A-3	Auditoriums without permanent seating, art galleries, exhibition halls, museums, lecture halls, libraries, arcades and gymnasiums	1 per 125	1 per 60	1 per 200		1 per 500	
			Passenger terminals and transportation facilities	1 per 500	1 per 500	1 per 750		1 per 1000	
		A-3	Places of worship and other religious services; churches without assembly halls	1 per 150	1 per 75	1 per 200		1 per 1000	
		A-4	Coliseums, arenas, skating rinks, pools and tennis courts for indoor sporting events and activities	1 per 75 for the first 1500 and 1 per 120 for the remainder exceeding 1500	1 per 35 for the first 1500 and 1 per 60 for the remainder exceeding 1500	1 per 200	1 per 150	1 per 1000	

		A-5	Stadiums, amusement parks, bleachers and grandstands for outdoor sporting events and activities (less than 3000 seats)	1 per 75 for the first 1500 and 1 per 120 for the remainder exceeding 1500	1 per 35 for the first 1500 and 1 per 60 for the remainder exceeding 1500	1 per 200	1 per 150	1 per 1000	
2	Business	B	Buildings for the transaction of business, professional services, other services involving merchandise, office buildings, banks, light industrial and similar uses	1 per 50		1 per 80		1 per 100	
3	Educational	E	Educational facilities	1 per 50		1 per 50		1 per 100	
			Day Cares	1 per 17		1 per 17			
4	Factory and industrial	F-1 and F-2	Structures in which occupants are engaged in work fabricating, assembly or processing of products or materials	1 per 100		1 per 100		1 per 400	
5	Institutional	I -1	Residential care	1 per 10		1 per 10		1 per 100	1 per 8

		I-2	Hospitals, ambulatory nursing home patients [a]	1 per sleeping room [b]	1 per sleeping room [b]	1 per 100	1 per 15
			Employees other than residential care [a]	1 per 25	1 per 35	1 per 100	
			Visitors other than residential care	1 per 75	1 per 100	1 per 500	
		I-3	Prisons	1 per cell	1 per cell	1 per 100	1 per 15
		I-3	Reformatories, detention centers, and correctional centers [a]	1 per 15	1 per 15	1 per 100	1 per 15
		I-4	Adult daycare and childcare	1 per 17	1 per 17	1 per 100	
6	Mercantile	M	Retail stores, service stations, shops, salesrooms, markets and shopping centers	1 per 500	1 per 750	1 per 1000	
7	Residential	R-1	Hotels, motels, boarding houses (transient)	1 per sleeping unit	1 per sleeping unit		1 per sleeping unit

		R-2[c]	Dormitories, fraternities, sororities and boarding houses (non transient)	1 per 10	1 per 10	1 per 100	1 per 8
		R-2[c]	Apartment houses	1 per dwelling unit	1 per dwelling unit		1 per dwelling unit
		R-3	One-and-two family dwellings	1 per dwelling unit	1 per dwelling unit		1 per dwelling unit
		R-4	Residential Care/Assisted living facilities	1 per 10	1 per 10	1 per 100	1 per 8
8	Storage	S-1 S-2	Structures for the storage of goods warehouses, storehouses and freight depots; low and moderate hazard.	1 per 100	1 per 100		1 per 100

a. Toilet facilities for employees shall be separate from facilities for inmates or patients.
b. A single-occupant toilet room with one water closet and one lavatory serving not more than two adjacent patient sleeping rooms shall be permitted where the room is provided with direct access from each patient sleeping room and with provisions for privacy.
c. For Group R-2 occupancies, one automatic clothes washer connection shall be required per 20 dwelling units.
d. Where urinals are provided, one water closet less than the number specified may be provided for each urinal installed, except the number of water closets shall not be reduced to less than 50% of the number specified.
e. Buildings where water is served from bottled water coolers or buildings having an occupant load of less than 30 shall not be required to provide drinking fountains.

2902.2 Separate facilities. Where plumbing fixtures are required, separate facilities shall be provided for each sex.

Exceptions:

1. Separate facilities shall not be required for ~~private facilities~~ dwelling units and sleeping units.

2. Separate employee facilities shall not be required in occupancies in which 15 or fewer people are employed.

3. Separate facilities shall not be required in structures or tenant spaces with a total occupant load, including both employees and customers, of 15 or less.

4. Separate facilities shall not be required in mercantile occupancies in which the maximum occupant load is 50 or less.

5. Separate facilities shall not be required for child day care facilities.

2902.6 Public facilities. Customers, patrons and visitors shall be provided with public toilet facilities in structures and tenant spaces intended for public utilization. Public toilet facilities shall be located not more than one story above or below the space required to be provided with public toilet facilities and the path of travel to such facilities shall not exceed a distance of 500 feet (152 m).

Exception: Structures used for people awaiting transportation, such as transit centers, shall not be required to install plumbing facilities when the following conditions occur:

1. No employees or security personnel remain on the premises unless in transit or providing temporary maintenance.

2. The structure is an open-air structure with no enclosing walls.

3. The structure is only intended to shelter people awaiting transportation.

2902.6.2 Reserved. ~~**Pay facilities.** Where pay facilities are installed, such facilities shall be in excess of the required minimum facilities. Required facilities shall be free of charge.~~

CHAPTER 30
ELEVATORS AND CONVEYING SYSTEMS

3001.1 Scope. ~~This chapter governs the design, construction, installation, alteration and repair of elevators and conveying systems and their components.~~ The provisions of this chapter shall apply to the design, construction, installation, operation, alteration and repair of elevators, dumbwaiters, escalators, manlifts, moving walks, inclined stairway chairlifts, wheelchair lifts, vertical reciprocating conveyors and personnel hoists.

The building official shall have the authority to adopt and enforce rules and regulations to administer the provisions of this chapter. Such rules and regulations may include, but shall not be limited to, establishing qualifications and other requirements for approval and registration of an approved agency, providing frequency of inspections, and providing for formats of reports, inspection checklists, and other required documents.

The building official shall issue such notices or orders as may be necessary to remove illegal or unsafe conditions, to secure necessary safeguards during construction, to enforce compliance with this chapter, to receive required applications, to issue permits and serial numbers, and to furnish the prescribed certificates.

3001.2 ~~**Referenced standards.** Except as otherwise provided for in this code, the design, construction, installation, alteration, repair and maintenance of elevators and conveying systems and their components shall conform to ASME A17.1, ASME A90.1, ASME B20.1, ALI ALCTV, and ASCE 24 for construction in flood hazard areas established in Section 1612.3.~~ **State/ASME/ANSI Standards.** Except as otherwise provided in this chapter, all elevators, dumbwaiters, escalators, moving walks, inclined stairway chairlifts, wheelchair lifts and alterations to such conveyances and the installation thereof shall conform to the requirements of the standards adopted in Chapter 754 of the Texas Health and Safety Code and the standards adopted thereunder by the Texas Commissioner of Licensing and Regulation. The term "Elevator Safety Code" as used in this code shall mean the foregoing state-adopted standards. Manlifts and alterations and installations thereof shall conform to the Safety Standards for Manlifts, American National Standards Institute, Publication No. ANSI A90.1, and the term "Manlift Safety Code" as used in this code shall mean the said publication. Personnel hoists and alterations and installations thereof shall conform to the Safety Requirements for Personnel Hoists, American National Standards Institute, Publication No. ANSI A1034, and the term "Personnel Hoist Safety Code" as used in this code shall mean the said publication.

3001.2.1 Adoption of state standards. Notwithstanding any provision of this code that may be construed to the contrary, it is the express intent of this jurisdiction that this code be construed as establishing standards of inspection and certification of elevators, escalators, and related equipment and standards for elevator inspection personnel that are no less stringent in any respect than those adopted in or pursuant to Chapter 754 of the Texas Health and Safety Code, which state standards and any amendments hereafter made thereto are adopted and incorporated into this code by reference. To the extent of any inconsistency between the state standards and the other provisions of this code, the more stringent provisions shall apply.

3001.3 ~~**Accessibility.** Passenger elevators required to be accessible by Chapter 11 shall conform to ICC/ANSI A117.1.~~ **Definitions.** For purposes of this chapter, certain terms are defined in the Elevator Safety Code and read as follows:

ANSI CODE is the current ASME/ANSI A17.1 Safety Code for Elevators and Escalators, an American National Standard published by the American Society of Mechanical Engineers. See Section 3001.2.

APPROVED AGENCY is an established and recognized agency regularly engaged in conducting tests or furnishing inspection services, when such agency has been approved.

AUTHORIZED COMPANY is an established and registered company regularly engaged in the installation or repair of elevators, escalators, dumbwaiters, or moving walks.

AUTHORIZED INSPECTOR is an inspector who is qualified as QEI-1 and is registered with the building official.

MANLIFT is a device consisting of a power-driven endless belt provided with steps or platforms and handholds attached to it for transportation of personnel from floor to floor.

PERSONNEL HOIST is a special-purpose elevator or hoist erected outside a building or structure for transporting workers or materials in connection with the construction, alteration, maintenance or demolition of a building, structure, or other works.

WHEELCHAIR LIFT is a vertical wheelchair lift or an inclined wheelchair lift as governed by the Elevator Safety Code, whether of a public building or residential type.

3001.4 Change in use. A change in use of an elevator from freight to passenger, passenger to freight, or from one freight class to another freight class shall not be made without the approval of the building official. Said approval shall be granted only after it is demonstrated that the installation conforms to the requirements of the Elevator Code. ~~comply with Part XII of ASME A17.1.~~

3002.3 Emergency signs. An approved pictorial sign of a standardized design shall be posted adjacent to each elevator call station on all floors instructing occupants to use the exit stairways and not to use the elevators in case of fire. The sign shall read: IN FIRE EMERGENCY, DO NOT USE ELEVATOR. USE EXIT STAIRS. The lettering shall be at least ½" block letters on a background of contrasting color so that the lettering is clearly visible. ~~The emergency sign shall not be required for elevators that are part of an accessible means of egress complying with Section 1007.4.~~

3002.8 Elevator pits. All elevator pits shall be provided with a sump pump. The sump pump shall be hard piped and hard wired and equipped with a hose bibb located at least 36 inches (914.4 mm) above the elevator door sill inside the hoistway or elevator machinery room.

3004.1 ~~**Vents required.** Hoistways of elevators and dumbwaiters penetrating more than three stories shall be provided with a means for venting smoke and hot gases to the outer air in case of fire.~~ **Hoistway venting.** When provided, the venting of each individual hoistway shall be independent from any other hoistway venting, and the interconnection of separate hoistways for the purpose of venting prohibited.

~~**Exceptions:**~~

1. ~~In occupancies of other than Groups R-1, R-2, I-1, I-2 and similar occupancies with overnight sleeping quarters, venting of hoistways is not required where the building is equipped throughout with an approved automatic sprinkler system installed in accordance with Section 903.3.1.1 or 903.3.1.2.~~
2. ~~Sidewalk elevator hoistways are not required to be vented.~~

~~**3004.2 Location of vents.** Vents shall be located below the floor or floors at the top of the hoistway, and shall open either directly to the outer air or through noncombustible ducts to the outer air. Noncombustible ducts shall be permitted to pass through the elevator machine room provided that portions of the ducts located outside the hoistway or machine room are enclosed by construction having not less than the fire~~

~~protection rating required for the hoistway. Holes in the machine room floors for the passage of ropes, cables or other moving elevator equipment shall be limited so as not to provide greater than 2 inches (51 mm) of clearance on all sides.~~

~~**3004.3 Area of vents.** Except as provided for in Section 3004.3.1, the area of the vents shall not be less than 3 1/2 percent of the area of the hoistway nor less than 3 square feet (0.28 m²) for each elevator car, and not less than 3 1/2 percent nor less than 0.5 square foot (0.047 m²) for each dumbwaiter car in the hoistway, whichever is greater. Of the total required vent area, not less than one-third shall be of the permanently open type unless all vents activate upon detection of smoke from any of the elevator lobby smoke detectors.~~

~~**3004.3.1 Reduced vent area.** Where mechanical ventilation conforming to the *International Mechanical Code* is provided, a reduction in the required vent area is allowed provided that all of the following conditions are met:~~

~~1. The occupancy is not in Group R-1, R-2, I-1 or I-2 or of a similar occupancy with overnight sleeping quarters.~~
~~2. The vents required by Section 3004.2 do not have outside exposure.~~
~~3. The hoistway does not extend to the top of the building.~~
~~4. The hoistway and machine room exhaust fan is automatically reactivated by thermostatic means.~~
~~5. Equivalent venting of the hoistway is accomplished.~~

~~**3004.4 Closed vents.** Closed portions of the required vent area shall consist of windows or duct openings glazed with annealed glass not more than 0.125 inch (3.2 mm) thick.~~

~~**3004.5 Plumbing and mechanical systems.** Plumbing and mechanical systems shall not be located in an elevator shaft.~~

~~**Exception:** Floor drains, sumps and sump pumps shall be permitted at the base of the shaft provided they are indirectly connected to the plumbing system.~~

3005.1 General. Escalators, moving walks, vertical reciprocating conveyors ~~conveyors,~~ personnel hoists and material hoists shall comply with the provisions of this section.

3005.2.2 Escalators. Where provided in below-grade transportation stations, escalators shall have a clear width of 32 inches (815 mm) minimum.

Exception: The clear width is not required in existing facilities undergoing alterations.

3005.3 Vertical reciprocating conveyors. Vertical reciprocating conveyors shall be installed to comply with ASME B20.1. An installation permit is required before the installation of any vertical reciprocating conveyor. The fees shall be as required for elevators (see Section 117 for fees). A one-time final inspection report must be submitted to the building official by an approved inspection agency before the vertical reciprocating conveyor is put into operation.

The building owner or owner's representative shall be responsible for the safe operation and maintenance of the vertical reciprocating conveyor. ~~**Conveyors.** Conveyors and conveying systems shall comply with ASME B20.1.~~

~~**3005.3.1 Enclosure.** Conveyors and related equipment connecting successive floors or levels shall be enclosed with fire barrier walls and approved opening protectives complying with the requirements of Section 3002 and Chapter 7.~~

~~**3005.3.2 Conveyor safeties.** Power-operated conveyors, belts and other material-moving devices shall be equipped with automatic limit switches which will shut off the power in an emergency and automatically stop all operation of the device~~.

3005.5 Escalator skirt deflector devices.

3005.5.1 Purpose. The purpose of this section is to improve the overall safety of escalators located within the jurisdiction by establishing provisions for the installation of escalator skirt deflector devices on new and existing escalators.

3005.5.2 Definitions.

ESCALATOR SKIRT DEFLECTOR DEVICE shall mean a device that reduces the risk of objects coming into contact with the skirt.

INSTALLATION DATE, for the purposes of this section only, shall be date the permit was obtained for installation.

3005.5.3 Compliance program. All escalators installed on or after October 21, 2001, shall be equipped with escalator skirt deflector devices or equivalent protection in accordance with ASME A17.1 Safety Code for Elevators and Escalators. The owners of existing buildings in which one or more escalators were installed prior to October 21, 2001, shall have skirt deflector devices or equivalent protective equipment installed on all escalators no later than January 1, 2011.

3005.3.4 Approval. The building official shall have the authority to adopt and enforce rules and regulations to administer approval of the design, construction, configuration and installation of skirt deflector devices for use in this jurisdiction. The building official shall promulgate such rules and regulations.

3005.5.5 Technical requirements. Escalator skirt deflector devices shall be installed in accordance with the deflector device manufacturer's recommended installation instructions, and the ASME A17.1 Safety Code for Elevators and Escalators.

3006.2 Venting. Elevator machine rooms that contain solid-state equipment for elevator operation shall be provided with an ~~independent~~ approved ventilation or air-conditioning system to protect against the overheating of the electrical equipment. The system shall be capable of maintaining temperatures within the range established for the elevator equipment.

SECTION 3007

ELEVATORS FOR HIGH RISE BUILDINGS

3007.1 Elevators. Elevators and elevator lobbies for high rise buildings shall comply with the provisions in this section and the other provisions of this chapter.

1. A bank of elevators is a group of elevators or a single elevator controlled by a common operating system; that is, all those elevators that respond to a single call button constitute a bank of elevators. There is no limit on the number of cars that may be in a bank or group, but there may not be more than four cars within a common hoistway. Hoistways shall be separated by a two-hour fire resistive separation.

2. Each elevator lobby shall be provided with at least two approved listed smoke detectors located on the lobby ceiling, one positioned at each opening into the lobby other than elevator door entrances, or at least one approved listed smoke detector with alarm verification sequence per NFPA 72. When two detectors, each on a separate initiating circuit, or one alarm sequence verification detector on the same initiating circuit, are activated, elevator cars shall return to a floor providing direct egress from the building (or to a transfer floor if the cars do not serve an egress floor), and the elevator doors shall open to permit egress of passengers. In the event of a failure of normal electrical service, the standby power system shall have sufficient capacity to return all elevators to the floor of egress on an automatic or manual selective program of one elevator in each bank of elevators simultaneously. If the return system is manually actuated, an alarm system shall be provided to summon assistance.

NOTE: Banks of elevators not deactivated by the products of combustion detectors shall remain in normal operation. In the event of a fire on the lowest terminus floor, the elevator call shall stop on a floor above the floor of fire involvement.

3. Elevator hoistways shall not be vented through an elevator machine room.
4. An elevator lobby is defined as that portion of a corridor or space within 10 feet of an elevator entrance door. Buildings having banks of elevators serving more than two floors that terminate on an upper floor (sky lobbies) and do not return to a floor level providing direct egress from the building shall have elevator lobbies with a corridor directly connected to an exit stairway. The sky lobbies and connecting corridors shall be separated from the remainder of the building by a two-hour fire resistive occupancy separation.

5. When elevators are returned to the floor of egress due to the activation of the fire-detection system, the elevator doors shall open for egress and the elevator shall be shut down. Door open buttons in each car shall remain active. Under this circumstance, facilities shall be provided to permit the operation of any one elevator in an elevator bank by the fire department through the use of a “fireman’s bypass key.” The selected elevator shall be manually operated.

6. Elevators serving below the flood plane for the building shall have a water sensor installed in the hoistway below the lowest landing that the elevator serves to prevent the elevator from descending into a flooded area.

SECTION 3008

PERMITS-CERTIFICATES OF INSPECTION

3008.1 Construction permits.

3008.1.1 General. A separate permit shall be required before erecting or constructing any new elevator, dumbwaiter, escalator, manlift, moving walk, vertical reciprocating conveyors, inclined stairway chairlift, personnel hoist or wheelchair lift, or relocating such existing equipment. The installer of the equipment shall submit an application for such permit accompanied by plans and specifications in duplicate, in such form as the building official may prescribe. When such plans and specifications indicate compliance with this chapter and other provisions of this code, and the fees specified in Section 117 have been paid, the building official shall issue a construction permit. The plans and specifications shall be stamped "Approved" when the building official issues a

construction permit where plans are required. Such approved plans and specifications shall not be changed, modified or altered without authorization from the building official, and all work shall be done in accordance with the approved plans.

3008.1.2 Notification of completion. It shall be the duty of each person installing, relocating or altering such conveyances to notify the building official in writing, at least seven days before completion of the work, and to subject the new, moved or altered portions of the equipment to the acceptance test required by the Elevator Safety Code, Manlift Safety Code or Personnel Hoist Safety Code, as applicable, to show that such equipment meets the requirements specified before placing the equipment into service.

3008.1.3 Acceptance inspections. All acceptance inspections shall be performed by the building official or an approved agency.

3008.2 Operating permits.

3008.2.1 General. An operating permit shall be issued by the building official for an elevator, dumbwaiter, escalator, manlift, moving walk, inclined stairway chairlift or wheelchair lift within 10 days following the receipt of an inspection report indicating compliance with this chapter and applicable safety codes and the payment of the fee provided in Section 117.

No owner or lessee of an elevator, dumbwaiter, escalator, manlift, moving walk, inclined stairway chairlift, personnel hoist, or wheelchair lift shall suffer or permit the same to be operated by any person except under a current and valid operating permit or limited permit that has been issued for the equipment by the building official.

EXCEPTION: No operating permit or limited permit shall be required for the operation of the conveyance equipment if located in a Group R- 3 occupancy or in an individual dwelling unit of a Group R-2 Occupancy.

The operating permit shall be issued for a period of one year and shall be valid only for the operation of the equipment at the rated load and speed for such equipment, which shall be stated on the permit. Operating permits shall not be issued for personnel hoists, and they shall be subject to operation only under a limited permit.

If an inspection report required by this chapter indicates failure of compliance with applicable requirements of this chapter, or, in the case of new or altered installations, with detailed plans and specifications approved by the building official, the building official shall give written notice to the owner or lessee or the person or persons filing such plans and specifications of the deficiencies that must be cured for compliance therewith. After the equipment has been brought into conformity, the building official shall issue an operating permit.

3008.2.2 Annual operating permit. Permits will show the location, type and number of units permitted.

3008.2.3 Posting of permits. Permits shall be posted in conspicuous locations that are readily accessible to the building official.

3008.2.4 Limited operating permit. The building official may issue a limited permit authorizing the temporary use of any elevator, dumbwaiter, escalator, manlift, moving walk, inclined stairway chairlift, personnel hoist or wheelchair lift for passenger or freight service during its installation or alteration

In the case of elevators, such limited permit will not be issued until the elevator has been tested with rated load;car safety and terminal stopping equipment have been tested to determine the safety of the equipment; and permanent or temporary guards or enclosures have been placed on the car, around the hoistway and at the landing entrances on each floor. Landing entrance guards shall be provided with locks that can be released from the hoistway side only. Automatic and continuous pressure elevators shall not be placed in temporary operation from the landing push buttons unless door-locking devices and/or interlocks required by the Elevator Safety Code are installed and operative. All tests required by this paragraph and reports thereof must indicate compliance with all applicable provisions of the Elevator Safety Code before a temporary permit will be issued.

For personnel hoists, a limited permit will not be issued until the hoist has been inspected in accordance with the Personnel Hoist Safety Code and has been determined to be in compliance therewith.

3008.2.5 Life of limited permits. Limited permits shall be issued in the same manner as operating permits, provided that they shall be valid for a period not to exceed 90 days. However, any equipment being operated pursuant to a limited permit shall be inspected at intervals not exceeding 30 days by the building official or an approved agency.

3008.2.6 Posting of limited permits. Each limited permit shall be conspicuously posted at a place that is near to or visible from each entrance to permitted equipment, and the limited permit shall also include a statement that the equipment has not been finally approved.

3008.2.7 Responsibility. The person installing, relocating or altering any equipment operating under a limited permit shall be responsible for its operation and maintenance and for all required tests and inspections until the operating permit therefor has been issued by the building official.

The owner or owner's representative shall be responsible for the safe operation and proper maintenance of such equipment after the operating permit has been issued, and during the period of effectiveness of any limited permit. The owner or owner's representative shall also be responsible for all initial and periodic tests required by this chapter.

3008.2.8 Special permission for employee use. Special permission may be granted by the building official for use of freight elevators by employees of the establishment in which they are situated if the building official finds that the requirements of Rule 207.4 of the Elevator Safety Code have been complied with. The application therefor shall be made when the operating permit is requested, and the special permission, if granted, shall be noted on the operation permit. Except in accordance with the provisions of a special operating permit granted under this paragraph, it shall be unlawful for any elevator owner or other person in control of a freight elevator to suffer or permit the freight elevator to be used to carry any passengers other than as may be required to operate the elevator and to load and unload freight that is being carried upon the elevator.

3008.3 Approval of personnel hoists.

3008.3.1 General. A manufacturer, distributor or agent who desires approval of a hoist manufactured or distributed by him/her or by his/her principal shall submit a properly completed application meeting the requirements of this section, all data as hereafter prescribed, and payment of the fee for a manufacturer's design permit as required in Section 117. A manufacturer, distributor or agent shall submit a separate application, the fee and complete data for each model varying in tower construction, capacity, speed or method of operation.

If the building official finds that the hoist meets all the requirements of this code, the Personnel Hoist Safety Code, and all other applicable statutes and ordinances, a permit shall be issued identifying the make, model, capacity, and type of tower. If the building official finds that the hoist does not meet the requirements of this code, the Personnel Hoist Safety Code, or any other applicable statute or ordinance, the building official shall so notify the applicant in writing.

Manufacturer's data that must accompany the application for approval of new hoists includes:

1. Tower stress analysis, including two copies of structural specifications, drawings, and calculations, proving that the tower and base contain the factors of safety specified in the Requirements for Personnel Hoists, American National Standards Institute, Publication No. ANSI A10.4.

2. A letter giving the tower serial number, if any, or model description shall accompany the specifications. Such letter shall state the maximum height, wind velocity, car speed and car capacity for which the structure is designed when subjected to strain by operation of the car safety device and the maximum load and striking speed for which the buffers and base structures are designed.

3. A complete description as to the operation of the hoisting equipment and function of safety devices, including a schematic wiring diagram of safety and brake circuits and controller.

4. Periodic maintenance and inspection checklists, which must specify the frequency of each inspection. Among other things, those lists must include maximum safe tolerance of brake clearance, safety jaw clearance and guide displacement. Any special tools or equipment required in making an inspection shall be shown and described on each list.

5. All data described in the above items 1, 2, 3, and 4 must be approved by a professional engineer registered in the State of Texas.

3008.3.2 Inspections. Inspections will be made at a time convenient to the building official or approved agency and the construction job superintendent at least monthly and at such additional frequencies, if any, as are stated in the application for the personnel hoist as approved by the building official. The building official or approved agency shall immediately and verbally notify the construction job superintendent of any defects that would make the personnel hoist unsafe for continued operation, and the construction job superintendent shall take the personnel hoist out of service immediately and correct any defect that would make the hoist unsafe prior to continued operation. All other defects shall be corrected as soon as is reasonably possible. Within 24 hours after the inspection, the building official or an approved agency shall confirm the findings in a written report to the construction superintendent. If the building official or approved agency has directed that the personnel hoist be taken out of service pending its repair, then it shall not be returned to service until the building official or approved agency has reinspected the equipment and determined that it may safely be returned to service.

3008.3.3 Penalties for violation.

3008.3.3.1. User. It shall be unlawful for any person knowingly to use or to suffer or permit the operation of a personnel hoist with any defect that could make it unsafe for continued operation.

3008.3.3.2. Workers. It shall be the duty of the superintendent of each construction site to ensure that in the car of each hoist on the construction site, other than approved personnel hoists operating under a limited permit, there is conspicuously posted a card, furnished by the building official, stating, "DO NOT RIDE THIS HOIST. VIOLATORS SUBJECT TO A $200.00 FINE-CITY OF HOUSTON." Except as provided in Section 3008.3.6 below, it shall be unlawful for any person to ride in a car that is so posted.

3008.3.4 Manlifts. Nothing in this code or in the Personnel Hoist Safety Code shall be construed to prohibit the use of a manlift during construction.

3008.3.5 Hoist cage platform size. The restrictions in the Personnel Hoist Safety Code regarding the cage platform size do not apply if the cage is equipped with an overload safety device.

3008.3.6 Material hoist. Nothing in this chapter shall prohibit the general contractor from assigning a competent attendant to ride a material hoist during the required period of its use. This attendant, when assigned, shall:

1. Prevent passengers from riding the hoist (other than the attendant);

2. Prevent overloading the hoist; and

3. Observe and report unsafe conditions to the construction superintendent.

3008.4 Tests, inspections.

3008.4.1 General. The owner or owner's representative shall be responsible for the safe operation and maintenance of each elevator, dumbwaiter, escalator or moving walk installation and shall cause annual inspections, tests and maintenance to be made on such conveyances as required in this section.

3008.4.2 Periodic inspections and tests. Every elevator, dumbwaiter, escalator, manlift, moving walk, inclined stairway chairlift and wheelchair lift shall be periodically inspected for compliance with the requirements of this chapter and the Elevator Safety Code or Manlift Safety Code, as applicable, at intervals not exceeding 12 calendar months, provided any such inspection may be made during the month following the last calendar month during which the inspection was due. Such periodic tests shall not be required for any such equipment located in a Group R-3 occupancy or an individual dwelling unit of a Group R-2 occupancy.

3008.4.3 Load tests and inspections. Full load and safety tests shall be performed by an elevator company in the presence of the building official or an approved agency. Full load and safety tests and inspections shall be performed at intervals of five years for each traction-type elevator.

3008.4.4 Inspection costs. All costs of such inspections and tests shall be paid by the owner or owner's representative.

3008.4.5 Inspection reports. After each inspection, a full and correct report of such inspection shall be filed by the authorized inspector/approved agency with the building official within 10 days after the completion of the inspection. This report shall be in a format satisfactory to the building official and shall, at a minimum, indicate the name of the authorized inspector and the name of the authorized company or approved agency, the date of the inspection, the registration number of both the authorized inspector and the authorized inspecting company, the permanent identification number of the equipment inspected, name of the owner or the owner's representative and the tag

number assigned by the jurisdiction to the equipment inspected. Tags and report forms shall be obtained from the building official by the authorized inspecting company. The report shall certify that the equipment inspected meets the requirements of this chapter and the Elevator Safety Code or Manlift Safety Code, as applicable, insofar as a thorough and diligent inspection of the equipment as installed allows. The report shall list all items that do not perform in accordance with this chapter or the said safety codes. Every report shall be signed by the persons performing the inspection and witnessing the tests, as applicable.

3008.4.6 Inspections. Inspections shall be performed and/or witnessed by certified and authorized inspection personnel of an authorized company or approved agency in accordance with criteria set forth by the jurisdiction.

3008.4.7 Registration. Each authorized inspector shall meet the qualification requirements of the ASME QEI-1. All authorized inspectors and inspection supervisors shall be certified by an organization accredited by ASME in accordance with requirements of ASME QEI-1 and be annually registered with the jurisdiction. The business registration shall be authorization for such business organization to perform inspections and submit inspection reports. Only inspection reports submitted by authorized companies or approved agencies shall be acceptable when applying for a Certificate of Inspection.

Without limiting the building official's requirements, each approved agency shall be required to demonstrate that it has professional errors and omissions insurance coverage with policy limits of $500,000.00 or more, per occurrence; worker's compensation insurance coverage; and comprehensive general liability insurance coverage with policy limits of $1,000,000.00 or more, per occurrence. The jurisdiction shall be designated as an additional insured on the liability coverage, and the coverage shall include a cross-liability endorsement and a provision for 10 days' written notice to the jurisdiction prior to any cancellation. The building official shall also require an indemnity and hold harmless agreement in a form approved by the City Attorney.

All coverage shall be written by an insurance firm with a rating of A or better in the most recent A.M. Best directory.

3008.4.8 Registration revocation. The building official, for due cause, may revoke registration of any inspecting organization or inspector. Appeals of revocations may be made to the jurisdiction through the appropriate appeals process.

3008.4.9 Delinquent inspections. Failure of the building official to advise the owner or owner's representative does not reduce the responsibility of the owner's or owner's representative for annual inspections or load tests as specified in Section 3008.4.2. In the event that any required report of an inspection is not filed with the building official by the 30th day after the final date when such equipment should have been inspected or tested, the owner of the equipment or the owner's representative shall be presumed to be in violation of the requirements of this code.

If, after a 120-day period, the owner or the owner's representative has not complied with the requirements of this chapter by providing the information required, the jurisdiction shall have the authority to assign inspection of the equipment in question to an authorized inspection organization for completion of the necessary inspections and tests. The costs of such inspections shall be borne by the owner or the owner's representative, and the decision of the building official shall be binding on the owner or owner's representative.

3008.5 Fees for tests and inspections. Fees shall be required as scheduled in Section 117.

3008.6 Unsafe conditions. When an inspection reveals an unsafe condition, the inspector shall immediately file with the owner or owner's representative and the building official a full and true report of such inspection and such unsafe condition. If the building official finds that the unsafe condition endangers human life, the building official shall cause to be placed on such elevator, dumbwaiter, escalator, manlift, moving walk, inclined stairway chairlift, wheelchair lift or personnel hoist, in a conspicuous place, a notice stating that such conveyance is unsafe. The owner or owner's representative shall see to it that such notice of unsafe condition is legibly maintained where placed by the building official. The building official shall also issue an order in writing to the owner or owner's representative requiring the repairs or alterations to be made to such conveyance that are necessary to render it safe and may order the operation thereof discontinued until the repairs or alterations are made or the unsafe conditions are removed. A posted notice of unsafe conditions shall be removed only upon authority of the building official.

CHAPTER 31
SPECIAL CONSTRUCTION

3102.3 Type of construction. Noncombustible membrane structures shall be classified as Type IIB construction. Noncombustible frame or cable-supported structures covered by an approved membrane in accordance with Section 3102.3.1 shall be classified as Type IIB construction. Heavy timber frame-supported structures covered by an approved membrane in accordance with Section 3102.3.1 shall be classified as Type IV construction. Other membrane structures shall be classified as Type V construction.

Exception: Plastic less than 30 feet (9144 mm) above any floor used in greenhouses, where occupancy by the general public is not authorized, and for aquaculture pond covers, is not required to meet the fire propagation performance criteria of NFPA 701. ~~be flame resistant.~~

3102.3.1 Membrane and interior liner material. Membranes and interior liners shall be either noncombustible as set forth in Section 703.4, or meet the fire propagation performance criteria of ~~flame resistant as determined in accordance with~~ NFPA 701 and the manufacturer's test protocol.

Exception: Plastic less than 20 mil (0.5 mm) in thickness used in greenhouses, where occupancy by the general public is not authorized, and for aquaculture pond covers, is not required to ~~be flame resistant~~ meet the fire propagation performance criteria of NFPA 701.

3102.6.1.1 ~~Flame-resistant m~~ Membrane. A ~~flame-resistant~~ membrane meeting the fire propagation performance criteria of NFPA 701 shall be permitted to be used as the roof or as a skylight on buildings of Type IIB, III, IV and V construction provided it is at least 20 feet (6096 mm) above any floor, balcony or gallery.

3103.1.1 Permit required. Temporary structures that cover an area in excess of 120 square feet (11.16 m²)~~, including connecting areas or spaces with a common means of egress or entrance which are used or intended to be used for the gathering together of ten or more persons,~~ shall not be erected, operated or maintained for any purpose without obtaining a permit from the building official. Temporary buildings shall be completely removed upon the expiration of the time limit stated in the permit.

Exception: A separate permit is not required for a construction trailer or shed used during the construction of a structure when a permit has been obtained for the construction work.

3103.2 Construction documents. A permit application and construction documents shall be submitted for each installation of a temporary structure. The construction documents shall include a site plan indicating the location of the temporary structure and information delineating the means of egress and the occupant load. Such buildings or structures need not comply with the type of construction or fire-resistive time periods required by this code.

3104.3 Construction. The pedestrian walkway shall be of noncombustible construction.

Exception: ~~Combustible construction shall be permitted where connected buildings are of combustible construction.~~

1. Pedestrian walkways connecting buildings of Type III, IV or V construction may be constructed of one-hour fire resistive construction or of heavy-timber construction.
2. Pedestrian walkways located on grade having both sides open by at least 50 percent and connecting buildings of Type III, IV or V construction may be constructed with any materials allowed by this code.

3104.4 ~~Contents.~~ ~~Only materials and decorations approved by the building official shall be located in the pedestrian walkway.~~ **Multiple pedestrian walkways.** The distance between any two pedestrian walkways on the same horizontal plane shall not be less than 40 feet.

3104.5 ~~Fire barriers between pedestrian walkways and buildings.~~ ~~Walkways shall be separated from the interior of the building by fire barrier walls with a fire-resistance rating of not less than 2 hours. This protection shall extend vertically from a point 10 feet (3048 mm) above the walkway roof surface or the connected building roof line, whichever is lower, down to a point 10 feet (3048 mm) below the walkway and horizontally 10 feet (3048 mm) from each side of the pedestrian walkway. Openings within the 10-foot (3048 mm) horizontal extension of the protected walls beyond the walkway shall be equipped with devices providing a 3/4-hour fire protection rating in accordance with Section 715.~~

~~**Exception:** The walls separating the pedestrian walkway from a connected building are not required to have a fire-resistance rating by this section where any of the following conditions exist:~~

~~1. The distance between the connected buildings is more than 10 feet (3048 mm), the pedestrian walkway and connected buildings are equipped throughout with an automatic sprinkler system in accordance with NFPA 13, and the wall is constructed of a tempered, wired or laminated glass wall and doors subject to the following:~~

~~1.1. The glass shall be protected by an automatic sprinkler system in accordance with NFPA 13 and the sprinkler system shall completely wet the entire surface of interior sides of the glass wall when actuated.~~

~~1.2. The glass shall be in a gasketed frame and installed in such a manner that the framing system will deflect without breaking (loading) the glass before the sprinkler operates.~~

~~1.3. Obstructions shall not be installed between the sprinkler heads and the glass.~~

~~2. The distance between the connected buildings is more than 10 feet (3048 mm), and both sidewalls of the pedestrian walkway are at least 50 percent open with the open area uniformly distributed to prevent the accumulation of smoke and toxic gases.~~

~~3. Buildings are on the same lot, in accordance with Section 503.1.3.~~

~~4. Where exterior walls of connected buildings are required by Section 704 to have a fire-resistance rating greater than 2 hours, the walkway shall be equipped throughout with an automatic sprinkler system installed in accordance with NFPA 13.~~

~~The previous exceptions shall apply to pedestrian walkways having a maximum height above grade of three stories or 40 feet (12 192 mm), or five stories or 55 feet (16 764 mm) where sprinklered.~~

Openings between pedestrian walkways and buildings. Openings from buildings to pedestrian walkways shall conform to the requirements of Chapters 5 and 6 . In addition, pedestrian walkways connecting buildings shall either be provided with opening protection at connections to buildings in accordance with Section 715.3.3 or be constructed with both sides of the pedestrian walkway at least 50 percent open and have the open area distributed so as to prevent the accumulation of smoke and toxic gas.

Exception: When not required due to location between buildings, a pedestrian walkway opening need not be protected when the connection occurs at either a sprinklered building or an open parking garage.

3104.6 Public way. Pedestrian walkways over a public way shall ~~also comply with Chapter 32~~ be subject to the approval of the jurisdiction.

3104.10 Tunneled walkway. ~~Separation between the tunneled walkway and the building to which it is connected shall not be less than 2-hour fire-resistant construction and openings therein shall be protected in accordance with Table 715.3.~~ Tunneled walkways shall be sprinklered in accordance with NFPA 13.

3104.11 Ventilation. ~~Smoke and heat vents~~ Ventilation shall be provided for enclosed walkways and tunneled walkways ~~as required for Group F-1 occupancies~~ in accordance with ~~Section 910.~~ the Mechanical Code.

3105.4 Canopy materials. Canopies shall be constructed of a rigid framework with an approved covering, that ~~is flame resistant in accordance with~~ meets the fire propagation performance criteria of NFPA 701 or has a flame spread index not greater than 25 when tested in accordance with ASTM E 84.

3107.1 General. Signs shall be designed, constructed and maintained in accordance with Chapter 46 of this code.

SECTION 3108
RESERVED

***DELETE THIS SECTION IN ITS ENTIRETY AND RESERVE.**

3109.1 General. Swimming pools shall comply with the applicable requirements of the City Code and Chapter 757 of the Texas Health & Safety Code. ~~this section and other applicable sections of this code.~~

***DELETE THE REMAINDER OF SECTION 3109**

SECTION 3110
DRIVEWAYS, SIDEWALKS, PARKING LOTS AND ALLEYS

3110.1 Purpose. This section establishes minimum regulations governing the design and construction of driveways, sidewalks, parking lots and alleys.

Construction or repair of any sidewalk, driveway, curb or gutter shall comply with this chapter and Chapter 40, Article III, of the City Code.

3110.2 Definitions. The following words and phases, when used in this section, have the meanings respectively ascribed to them herein:

ALLEY. A public or private right-of-way that is not used primarily for through traffic and that provides vehicular access to rear entrances to buildings or properties that front on an adjacent street.

DRIVEWAY. An entrance to and exit from private premises that is designated for motor vehicle use and is not open for vehicle traffic except by permission of the owner of such private premises. (For purposes of this section, the definition of private street shall be the same as the definition of driveway.)

HIGHWAY, STREET OR ROAD. A general term denoting a public way for the purpose of vehicle travel, including the entire area within the right-of-way.

LOADING BERTH. A space for the loading, unloading or parking of trucks and motor vehicles other than motor vehicles principally designed for passengers that complies with Section 3110.9 of this code and with the requirements of Chapter 26 of the City Code.

LOCAL STREET OR ROAD. A street or road primarily intended for access to a residence, business or other abutting property.

MAJOR THOROUGHFARE. (1) A public street that is designated as a principal thoroughfare, a thoroughfare or a major collector on the most recent "Major Thoroughfare and Freeway Plan" approved by the City Council; or (2) any street that is designated as an express street pursuant to Section 45-39 of the City Code, and that is shown in the "Express Street Plan" of the Traffic Engineer.

PEDESTRIAN. Any person afoot.

RIGHT-OF-WAY. The entire area between the boundaries required for roadway devoted to highway, street or road purposes.

ROADWAY (GENERAL). The portion of a highway, including shoulder, for vehicular use.

SIDEWALK. That portion of a street between the curb lines or the lateral lines of a roadway and the adjacent property lines that is intended for the use of pedestrians.

3110.3 Jurisdiction approval of plans and specifications. No person shall construct or cause to be constructed any driveway, sidewalk, private street, parking lot or alley connecting private property with a public street without prior approval of the jurisdiction's Department of Public Works and Engineering. In addition, the jurisdiction's Department of Planning and Development shall review and approve all required parking lots proposed to be constructed.

3110.4 Driveway approval. Upon receipt of an application for a driveway permit, the building official shall refer the same to the jurisdiction's Office of the City Engineer in the Department of Public Works and Engineering, which shall make a determination, pursuant to the guidelines set out in Section 40-86 of the City Code, as to whether the driveway applied for is necessary to provide reasonable access to the private property consistent with the safety and convenience of the public.

After making such determination, the Office of the City Engineer shall certify the same to the building official who, after determining that the plans comply with all applicable codes and ordinances, shall issue a permit.

3110.5 State review of plans. The Texas Department of Transportation shall review plans for proposed construction of driveways, sidewalks, parking lots and alleys into or abutting state highways and freeway frontage roads. Evidence of the review and approval must be submitted with plans prior to obtaining the jurisdiction's approval.

~~**Exception:** State highways with curb-type construction will not require the state's review.~~

NOTE: The state's concurrence to proposed construction is insufficient alone since it is conditioned upon the jurisdiction's granting final approval.

3110.6 Standards for design and construction. There are hereby approved and adopted the drawings listed below which have been prepared by the jurisdiction's Department of Public Works and Engineering setting forth in detail the standards for design and/or construction of driveways, sidewalks, parking lots and alleys. The following drawings are shown at the end of this chapter:

1. Driveway Geometrics (T&T Dwg. No. 2156).
2. Space Requirement for Off-street Parking (T&T Dwg. No. 2157).
~~2~~ 3. Construction Standards for Driveways and Sidewalks on Curb-type Streets (P.W. Dwg. No. 02754-01).
~~3~~ 4. Construction Standards for Driveways with Culverts or Valley Gutters on Open Ditch-type Streets (P.W. Dwg. No. 02754-02).
~~4~~ 5. Wheelchair ramp (P.W. Dwg. No. 02775-2, 02775-03, 02775-04, 02775-05).
   5a. Wheelchair ramp details (P.W. Dwg. No. 02775-02)~~, 02775-03,~~.
   5b. Curb modifications for wheel chair ramps and crosswalks (P.W. Dwg. No. 02775-04)~~,~~.

5c. Commercial curb ramp detail (P.W. Dwg. No. 02775-05).

~~5~~ 6. Monolithic Curb and Gutter (P.W. Dwg. No. 02771-01).
~~6~~ 7. Typical "D" Inlet (P.W. Dwg. No. 02632-07).
~~7~~ 8. Typical "D-1" Inlet (P.W. Dwg. No. 02632-08).
~~8~~ 9. Type "B" Inlet Relocation (P.W. Dwg. No. 02632-03).
~~9~~ 10. Type "B-B" Inlet Relocation (P.W. Dwg. No. 02632-05).
~~10~~ 11. Pavement repairs
- 11a. Pavement repair details for street cuts (P.W. Dwg. No. 02902-01)~~,~~.
- 11b. Pavement repair details for street cuts (P.W. Dwg. No. 02902-02)~~,~~.
- 11c. Concrete pavement less than 5 years in age (P.W. Dwg. No. 02951-01)~~,~~.
- 11d. Concrete pavement over 5 years in age (P.W. Dwg. No. 02951-02)~~,~~.
- 11e. Asphalt pavement for pavement of all ages (P.W. Dwg. No. 02951-03).

12. Storm Sewer Ring Grate for Open End of 18" to 72" RCP Stubs to Ditch (P.W. Dwg. No. 02084-11).

3110.7 Plot plan. A complete site plan shall be prepared to a reasonable scale and submitted to the jurisdiction's Department of Public Works and Engineering and the jurisdiction's Department of Planning and Development showing the following information:

1. All right-of-way lines and property lines that bound the property planned for improvement.
2. Width and design of all existing driveways, sidewalks, and median openings as they exist on the ground.
3. Existing conditions between the right-of-way line and the traveled roadway, including curbs, ditches, storm sewer inlets, manholes, utility poles, fire hydrants, trees, etc. If median islands exist, the next median opening on each side of the property.
4. If open ditches exist, the diameter size of the nearest existing culvert pipe upstream and downstream.
5. The complete intersection when property planned for improvement fronts a "T" intersecting street.
6. All existing on-site conditions with dimensions when property is being improved with add-on construction, remodeling, accessories, repairs, erection of building parking lots or any other improvements.
7. All proposed driveways and sidewalks, shown in detail. Refer to Section 3110.6, Standards for Design and Construction.
8. Proposed parking lot layout showing the number of stalls, aisle width, general vehicular circulation pattern, and a chart illustrating the proposed means of compliance with the required parking standards and loading berths as specified by Chapter 26 of the City Code.
9. Existing parking lot layout showing the number of parking stalls, aisle width and general vehicular circulation pattern.

The submission shall include a copy of all appropriate drawings identified in Section 3110.6 required to complete the construction of the property submitted for construction permit.

3110.8 Sidewalks. Sidewalks shall be constructed along all major thoroughfares, both existing and new, abutting the property being developed. Sidewalks shall be constructed along all other public streets, both existing or new, abutting the property being developed where:

1. The property's frontage spans an entire block;
2. Sidewalks exist on any adjacent property;
3. The property has more than 125 feet of total street frontage; or
4. The property is located in an "urban area" designated pursuant to Chapter 42 of the City Code.

State highways and freeway frontage roads within the jurisdiction also fall within the scope of this requirement, subject to state review required in Section 3110.5.

Exception: The building official shall have the authority to modify the requirements of this section when determined that it is technically or otherwise infeasible to comply or when the property is situated in a planned community in which alternative pedestrian trails or passage ways are provided in lieu of sidewalks.

NOTE: Construction or repairs of sidewalks, driveways, curbs, curb ramps, and gutters shall comply with this chapter and Chapter 40, Article III, of the City Code.

3110.9 Loading berth. In no case shall a "back-in" loading berth be constructed on major thoroughfares where the vehicle will use the major thoroughfare for maneuvering purposes.

Where off-street "back-out" loading berths are constructed, the loading area shall be sufficiently designed and constructed to store the commercial motor vehicle, truck-tractor, tractor, trailer or semitrailer or combination of such vehicles within private property, and no part of the vehicle shall protrude over the property line or obstruct any public street or sidewalk area in whole or in part.

The depth of the loading berth from the right-of-way line extending into the private property shall be determined based on the types of commercial vehicles using the facility.

3110.10 Street curb and gutter replacement. Where construction of driveways and sidewalks will require the removal and replacement of curb and gutter over a continuous run in excess of 25 percent of any one block, a plan shall be submitted to the jurisdiction's Department of Public Works and Engineering. In addition to the requirements in Section 3110.7, the following shall be shown on the plans:

1. A continuous profile plotted to a scale of 1 inch equals 2 feet horizontally, containing all the existing and proposed profiles necessary for reviewing.
   The proposed gutter grade shall meet the following minimum design criteria:
   - 1.1. Minimum gutter grade, except at corner curb returns, shall be ~~0.3~~ 0.25 percent (3-inch fall per 100 feet).
   - 1.2. Minimum gutter grade around corner curb returns shall be 1.00 percent (example: 0.22-foot fall around 14-foot radius).
   - 1.3. A vertical curve with elevations given every 10 feet will be required where the algebraic difference of the proposed gutter grades exceeds 1.00 percent other than at corner curb radius grades.
2. Construction details for replacing curb and gutter and/or base shall be provided when it is necessary to remove same for realignment of curb and gutter horizontally or vertically. Method of the tie of proposed curb and gutter and/or base to existing pavement, with or without reinforcing steel, shall be given in detail. In order to provide adequate cross-slope drainage on asphalt streets, Type F asphalt must be feathered toward the crown of the street. A minimum 1/4 inch per foot slope will be required when raising proposed gutter above existing gutter line. Refer to P.W. Drawing No. 02771-01. Contact the ~~jurisdiction's~~ Office of the City Engineer of the jurisdiction's Department of Public Works and Engineering for clarification of these requirements when necessary.
3. Curb cuts and curb penetrations are prohibited excepted when specifically approved by the Office of the City Engineer.

3110.11 Alley paving. The requirements for paving a public alley are identical to those for paving a public street. Plan-profile type of drawings prepared by a licensed professional engineer in the State of Texas and approved by all appropriate jurisdiction departments are required. Figure 10-19 of the Design Manual of the Public Works and Engineering, City of Houston, February 1, 2005, will govern the design and construction of alleys. A separate paving permit issued by the jurisdiction's Department of Public Works and Engineering and a separate paving bond will be required prior to any construction.

3110.12 Driveway drainage. In the event an existing curb-type storm sewer inlet falls within the proposed driveway area, a new curb-type storm sewer inlet will be required to be constructed on the nearest

remaining straight curb line. The existing inlet will be converted to a flat grate-type inlet and connected to the new inlet by a concrete pipe lead of a diameter not less than the existing lead. Failure to show the existing inlets on the plot plan in no way excuses compliance with the above requirement, even though the permit may have been issued. Refer to Public Works Drawings Nos. 02632-03 and 02632-05 (relocation of Type B and B-B inlets).

3110.13 Culvert pipes.

3110.13.1 Pipe sizes. No culvert pipe of a diameter less than the inside diameter of the nearest upstream culvert pipe shall be installed. In no case will a culvert pipe of less than 24-inch inside diameter be allowed. Culverts shall be installed in such a manner as to not impede or obstruct ditch drainage. When connecting a drain line into a culvert pipe a Type D or Type D-1 inlet shall be constructed. Saddle-type inlets are prohibited in jurisdiction rights-of-way (refer to Public Works Drawings Nos. 02754-02, 02632-07 and 02632-08).

3110.13.2 New long run culvert pipe. In the event a request is made for runs of culvert pipe in excess of the normal maximum 40-foot-wide driveway culvert, the following procedure will be followed:

A plan-profile type drawing prepared by an engineer licensed in the State of Texas will be submitted to the jurisdiction's Office of the City Engineer in the Department of Public Works and Engineering for determination of the number and locations of Type D or D-1 inlets.

The licensed engineer will have to certify that the installation of the long run culvert pipe will not have any negative impact to upstream and downstream conditions and shall demonstrate that a positive impact will be achieved due this application.

The drawing shall include the size, material and gradients required for the culvert installation. The drawing shall also include all driveways and concrete curbed islands. A distance of at least 10 feet must be allowed between the abutting property and the nearest driveway. The space may be open ditch or curbed island. A permit issued by the jurisdiction's Office of the City Engineer in the Department of Public Works and Engineering will be required after the drawing is accepted in the file room of the Department of Public Works and Engineering. The approved permit will be forwarded to the Construction Service Section of the jurisdiction's Office of the City Engineer in the Department of Public Works and Engineering for inspection.

3110.13.3 Existing long run culvert pipe. Whenever a permit is sought for property having existing culvert pipe in excess of 40 feet without Type D or D-1 inlets as required by this section, such permit shall not be issued without the construction of Type D or Type D-1 inlets.

Stormwater discharging from a ditch into a storm sewer system must be received by use of an appropriate structure (i.e. stubs with ring grates or Type E inlets) (Public Works Drawing No. 02084-11).

The owner of the property may remove the existing culvert pipe in excess of 40 feet and return the ditch to its original condition in lieu of the installation of concrete curbed islands and Type D or Type D-1 inlets.

3110.14 Parking lot design.

3110.14.1 General. When an area is being developed for parking, a plan shall be prepared and submitted to the building official showing the boundary, entrances and exits, geometric layout of parking stalls and aisles, operating plan, drainage, and surfacing or paving. The area being developed for parking shall be surfaced with materials that will not permit wind or waterborne erosion from the area.

3110.14.2 Exiting from lot. When the parking lot is designed to create a one-way aisle operation, an exit shall be provided to enable the vehicle exiting to enter the street in a head-out position.

3110.14.3 Wheel stops. A 6-inch curb/wheel stop shall be installed not less than 2.5 feet from the right-of-way line when property is improved for vehicle use within 3 feet of the right-of-way line. Barrier fencing or minimum 4-inch-diameter posts spaced not more than 3 feet apart and not less than 2 feet in height may be installed on the right-of-way line as a substitute for wheel stops. If the improved area is concrete, a permanent 6-inch curb shall be installed in lieu of wheel stops.

3110.14.4 Drainage. Paved areas (including alleys), yards, courts and courtyards shall be drained into a storm sewer system where such systems are available; otherwise, they shall be drained to a place of disposal approved by the jurisdiction's Office of the City Engineer in the Department of Public Works and Engineering. Storm water drainage shall not discharge or flow over any public sidewalk or adjoining property.

3110.15 Bonded contractor. No permit shall be issued to construct, reconstruct, repair or regrade any driveway, sidewalk, culvert pipe, curb or gutter within the jurisdiction unless the applicant shows evidence that he/she has secured a bond in accordance with Section 40-95 of the City Code.

Exception: A homeowner will be issued a permit to install culvert pipe or construct a driveway where no curb cut is required, in accordance with jurisdiction specifications, without the bond required above.

3110.16 Responsibility of property owners. For responsibility of property owners abutting public streets relative to construction or repair of sidewalks, driveways and culverts, see Section 40-84 of the City Code. For jurisdiction requirements relative to altering the grades of driveways, sidewalks, culvert pipes, curbs and gutters see Section 40-90 of the City Code.

3110.17 Off-street parking. No building or structure shall be constructed, altered or moved onto any lot or building site unless off-street parking spaces are provided pursuant to the restrictions or covenants contained in or related to the subdivision plat or development plat for the property and the parking requirements established in Chapter 26 of the City Code.

3110.18 Driveways prohibited. Driveways are prohibited within any of the following areas:

1. The areas set forth by the Texas Department of Transportation as "access denied."
2. The areas designated "access denied" on recorded subdivision plats or another plat required to be approved by the City of Houston Planning Commission.
3. At the end of any dead-end street not terminating in a cul-de-sac or permanent turnaround and intended to be extended in the future.
4. The limits of any intersection, with the exception that special consideration will be given to major thoroughfares with existing esplanades and streets primarily used for residential use.
5. Abutting a local street where there is less than 20 feet of unobstructed depth from the right-of-way line to any obstruction. An overhead door will not be deemed as an obstruction provided that the width of the door is equal to or greater than the width of the driveway and there is also a minimum of 20 feet unobstructed depth on the private property where vehicles can be parked.
6. An area abutting major thoroughfares where the general design of parking does not provide the necessary depth 44 feet (~~13 420 mm~~) to allow a vehicle when exiting to enter the thoroughfare in a head-out position.
7. Any area where the jurisdiction's Department of Public Works and Engineering finds that it would not provide reasonable access to the private property consistent with the safety and convenience of the traveling public.
8. Within areas of unpaved street or alley rights-of-way, except as authorized by Section 40-340 of the City Code.

Where the construction of any building or structure upon a property causes a driveway to no longer comply with item~~s~~ 6 or 7, above, the driveway shall be removed and the area restored to its original state.

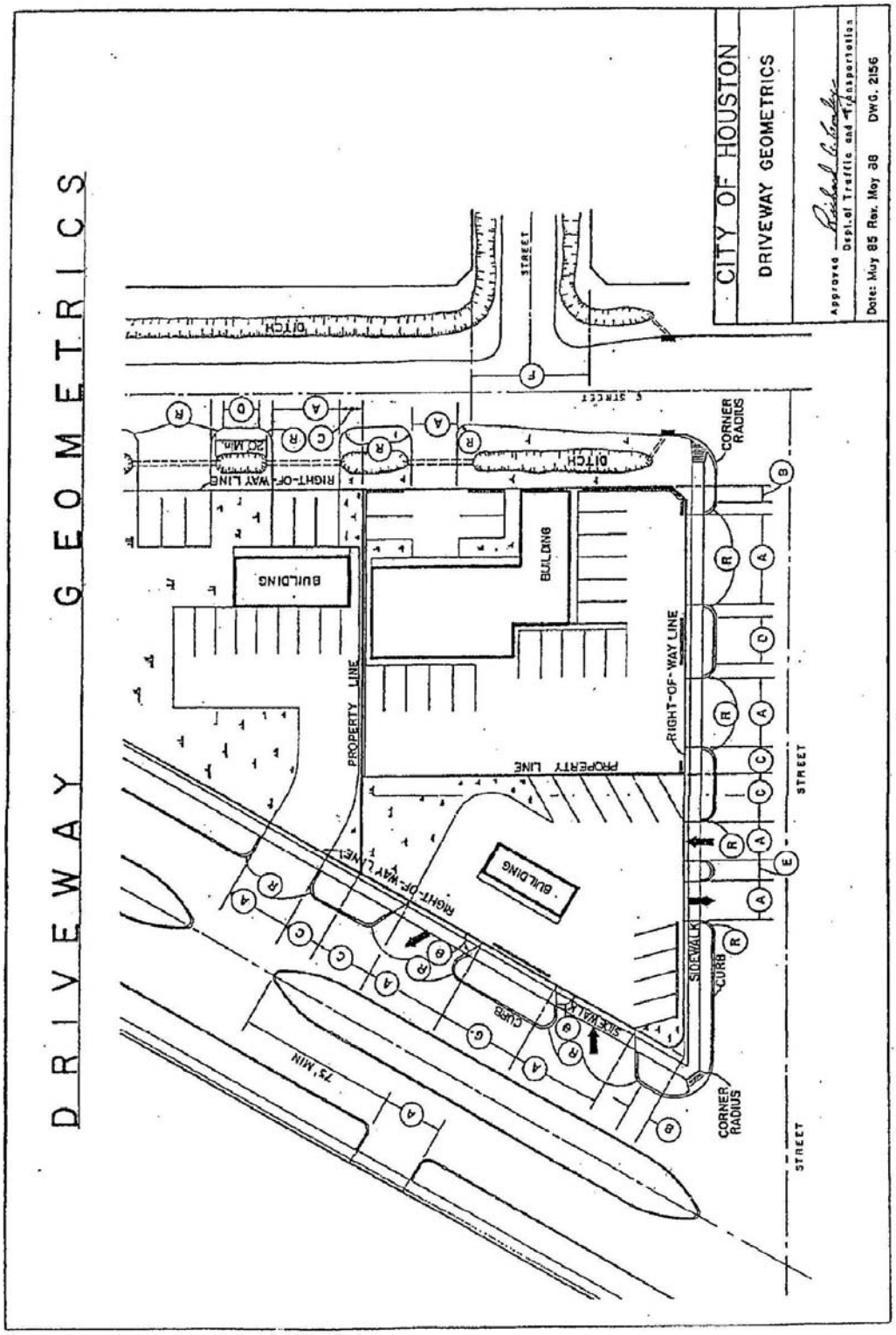
DRIVEWAY GEOMETRICS
CITY OF HOUSTON
DRIVEWAY GEOMETRICS
Approved
Dept. of Traffic and Transportation
Date: May 85 Rev. May 88 DWG. 2156
STREET
DITCH
RIGHT-OF-WAY LINE
BUILDING
PROPERTY LINE
CORNER RADIUS
SIDEWALK
CURB
75' MIN

DRAWING 31-1

Notes to Drawing 31-1

		RESIDENTIAL	ALL OTHERS
Dimension O---	Driveway Width : (1), (2) one - way two - way	 10' ~~12~~' min. - 20' max. 12' min. - 24' max.	 15' min. - 20' max. 24' min. - 35' max.
Dimension O---	corner r-o-w line (3)	20' min.	30' min.
Dimension O---	side property line (3)	- R min.	- R min.
Dimension O---	two-way (3)	N/A	10' min.
Dimension O---	one-way (perpendicular)	20' min. (4)	5' min. 20' max.
Dimension O---	one-way (angular)	20' min.	30' min.
Dimension O---	**Driveway Radius**	24' min. 15' max.	10' min. ~~15~~ 25' max.
Dimension O---	**Minimum Angle (4)**	45 deg.	45 deg.

Dimension O---

Driveway opening shall not be permitted withing the limits of any intersection with the exception that special consideration will be given to major thoroughfare with existing esplanades and streets primarily used for residential use.

1. Where off-street "back-in" type truck loading docks/wells are constructed on local streets, the width of the driveway opening may be increased to a maximum of 50 feet.
2. The two sides of a driveway shall be parallel within the right-of-way limits.
3. In no case shall the driveway radius encroach on abutting property or corner radius.
4. Driveways may be skewed at those locations where streets are one way or divided without median opening.

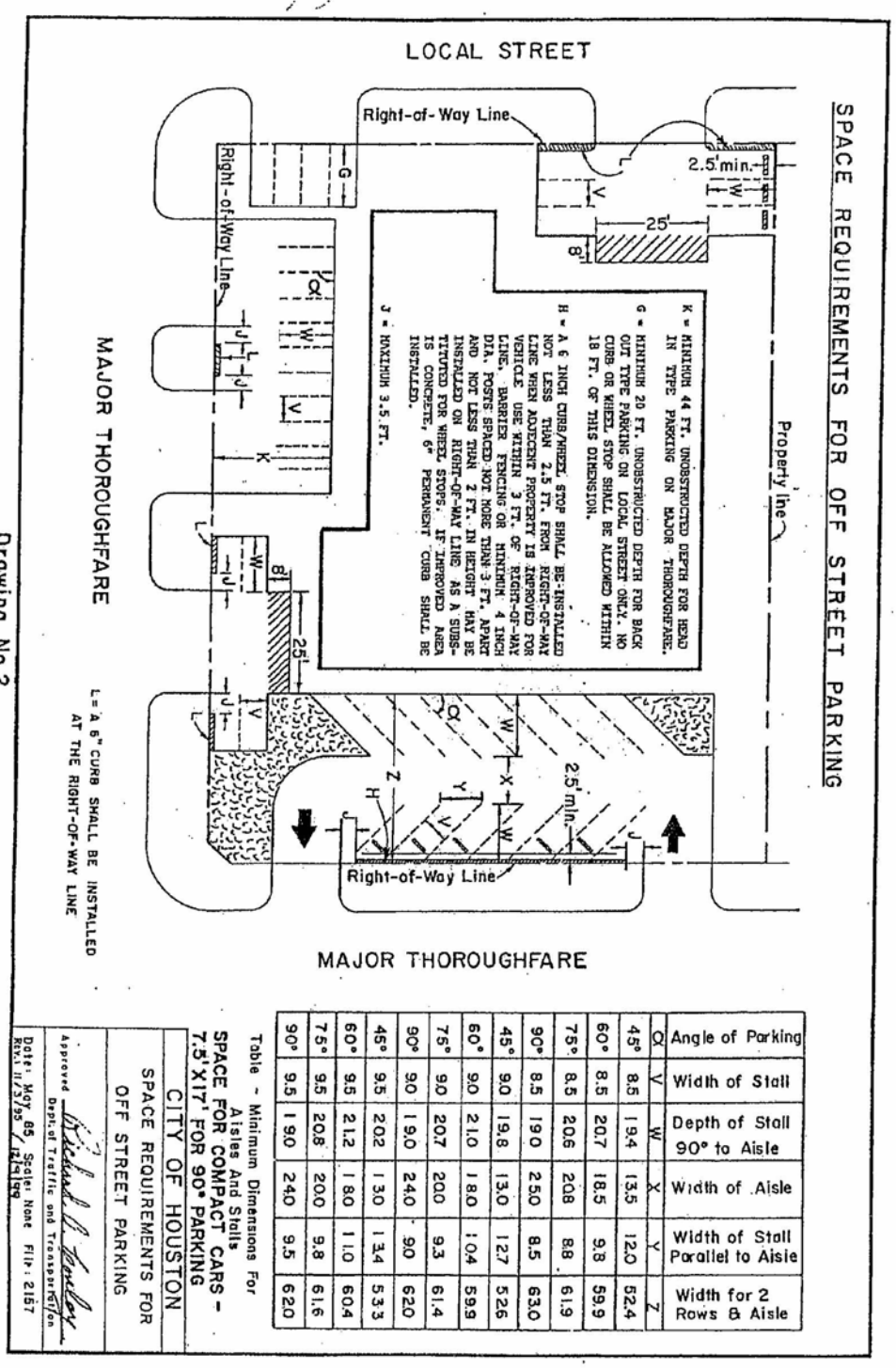

Table - Minimum Dimensions For Aisles And Stalls
SPACE FOR COMPACT CARS - 7.5'X17' FOR 90° PARKING

Q	Angle of Parking	V	Width of Stall	W	Depth of Stall 90° to Aisle	X	Width of Aisle	Y	Width of Stall Parallel to Aisle	Z	Width for 2 Rows & Aisle
45°		8.5		19.4		13.5		12.0		52.4	
60°		8.5		20.7		18.5		9.8		59.9	
75°		8.5		20.6		20.8		8.8		61.9	
90°		8.5		19.0		25.0		8.5		63.0	
45°		9.0		19.8		13.0		12.7		52.6	
60°		9.0		21.0		18.0		10.4		59.9	
75°		9.0		20.7		20.0		9.3		61.4	
90°		9.0		19.0		24.0		9.0		62.0	
45°		9.5		20.2		13.0		13.4		53.3	
60°		9.5		21.2		18.0		11.0		60.4	
75°		9.5		20.8		20.0		9.8		61.6	
90°		9.5		19.0		24.0		9.5		62.0	

CITY OF HOUSTON
SPACE REQUIREMENTS FOR OFF STREET PARKING
Approved Richard A. Tinsley
Dept. of Traffic and Transportation
Date: May 85 Scale: None File: 2157
Revd 11/3/95

DRAWING 31-2

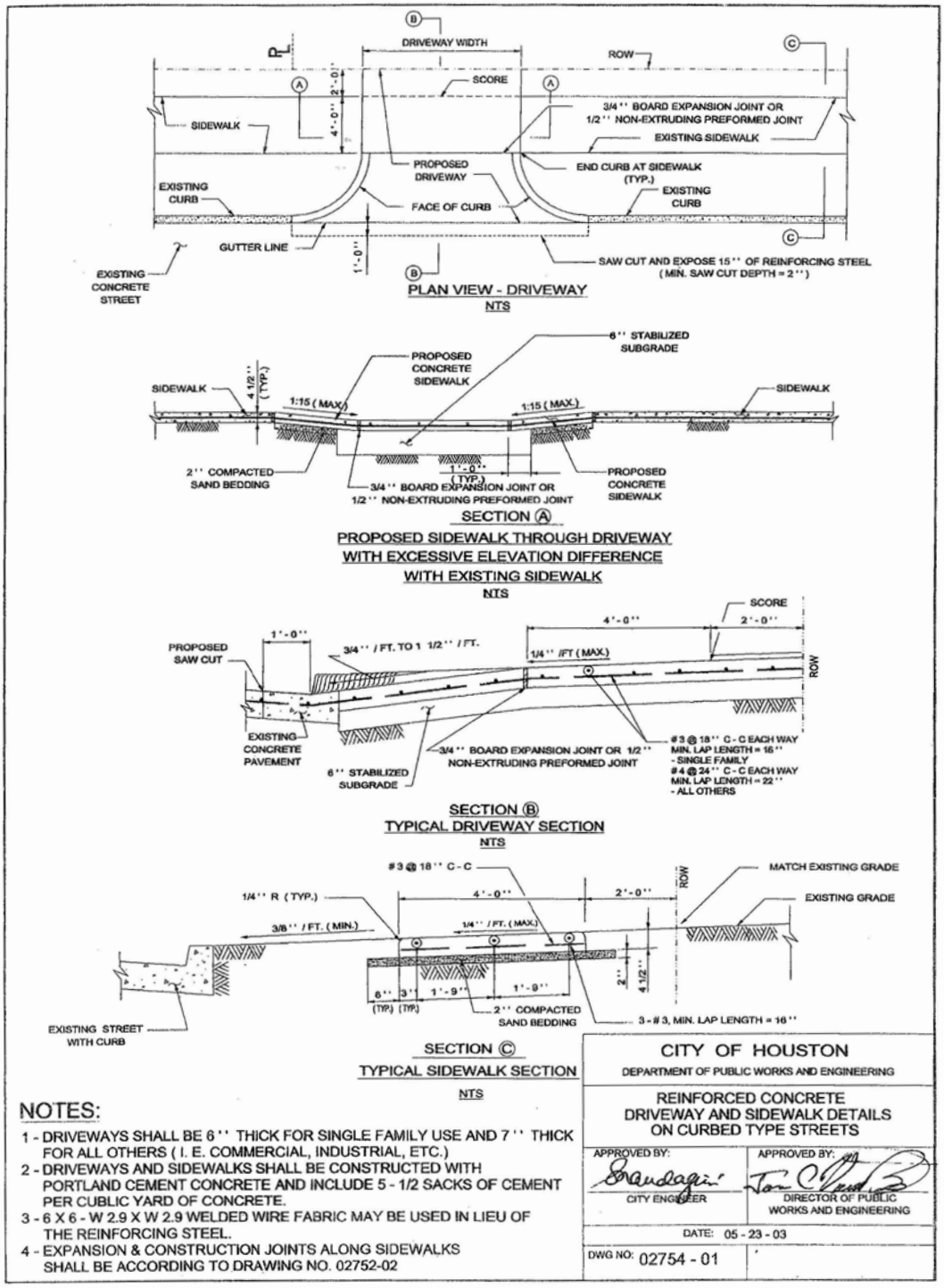
DRIVEWAY WIDTH
ROW
SCORE
2'-0"
4'-0"
SIDEWALK
3/4" BOARD EXPANSION JOINT OR
1/2" NON-EXTRUDING PREFORMED JOINT
EXISTING SIDEWALK
PROPOSED DRIVEWAY
END CURB AT SIDEWALK (TYP.)
EXISTING CURB
FACE OF CURB
EXISTING CURB
GUTTER LINE
1'-0"
SAW CUT AND EXPOSE 15" OF REINFORCING STEEL
(MIN. SAW CUT DEPTH = 2")
EXISTING CONCRETE STREET
PLAN VIEW - DRIVEWAY
NTS
6" STABILIZED SUBGRADE
PROPOSED CONCRETE SIDEWALK
SIDEWALK
4 1/2" (TYP.)
1:15 (MAX.)
1:15 (MAX.)
SIDEWALK
2" COMPACTED SAND BEDDING
1'-0" (TYP.)
3/4" BOARD EXPANSION JOINT OR
1/2" NON-EXTRUDING PREFORMED JOINT
PROPOSED CONCRETE SIDEWALK
SECTION Ⓐ
PROPOSED SIDEWALK THROUGH DRIVEWAY
WITH EXCESSIVE ELEVATION DIFFERENCE
WITH EXISTING SIDEWALK
NTS
SCORE
4'-0"
2'-0"
1'-0"
PROPOSED SAW CUT
3/4" / FT. TO 1 1/2" / FT.
1/4" /FT (MAX.)
ROW
EXISTING CONCRETE PAVEMENT
6" STABILIZED SUBGRADE
3/4" BOARD EXPANSION JOINT OR 1/2"
NON-EXTRUDING PREFORMED JOINT
#3 @ 18" C - C EACH WAY
MIN. LAP LENGTH = 16"
- SINGLE FAMILY
#4 @ 24" C - C EACH WAY
MIN. LAP LENGTH = 22"
- ALL OTHERS
SECTION Ⓑ
TYPICAL DRIVEWAY SECTION
NTS
#3 @ 18" C - C
1/4" R (TYP.)
4'-0"
2'-0"
ROW
MATCH EXISTING GRADE
EXISTING GRADE
3/8" / FT. (MIN.)
1/4" / FT. (MAX.)
2"
4 1/2"
6" (TYP.)
3" (TYP.)
1'-9"
1'-9"
2" COMPACTED SAND BEDDING
3 - #3, MIN. LAP LENGTH = 16"
EXISTING STREET WITH CURB
SECTION Ⓒ
TYPICAL SIDEWALK SECTION
NTS
NOTES:
1 - DRIVEWAYS SHALL BE 6" THICK FOR SINGLE FAMILY USE AND 7" THICK FOR ALL OTHERS (I. E. COMMERCIAL, INDUSTRIAL, ETC.)
2 - DRIVEWAYS AND SIDEWALKS SHALL BE CONSTRUCTED WITH PORTLAND CEMENT CONCRETE AND INCLUDE 5 - 1/2 SACKS OF CEMENT PER CUBIC YARD OF CONCRETE.
3 - 6 X 6 - W 2.9 X W 2.9 WELDED WIRE FABRIC MAY BE USED IN LIEU OF THE REINFORCING STEEL.
4 - EXPANSION & CONSTRUCTION JOINTS ALONG SIDEWALKS SHALL BE ACCORDING TO DRAWING NO. 02752-02
CITY OF HOUSTON
DEPARTMENT OF PUBLIC WORKS AND ENGINEERING
REINFORCED CONCRETE
DRIVEWAY AND SIDEWALK DETAILS
ON CURBED TYPE STREETS
APPROVED BY:
CITY ENGINEER
APPROVED BY:
DIRECTOR OF PUBLIC WORKS AND ENGINEERING
DATE: 05 - 23 - 03
DWG NO: 02754 - 01

DRAWING 31-3

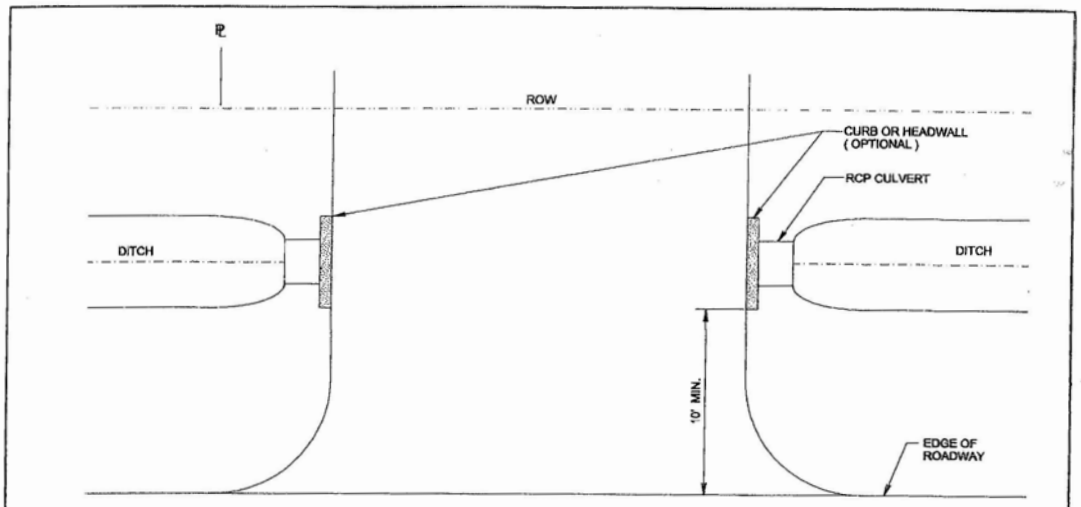

STANDARD OPEN DITCH DRIVEWAY - PLAN

NTS

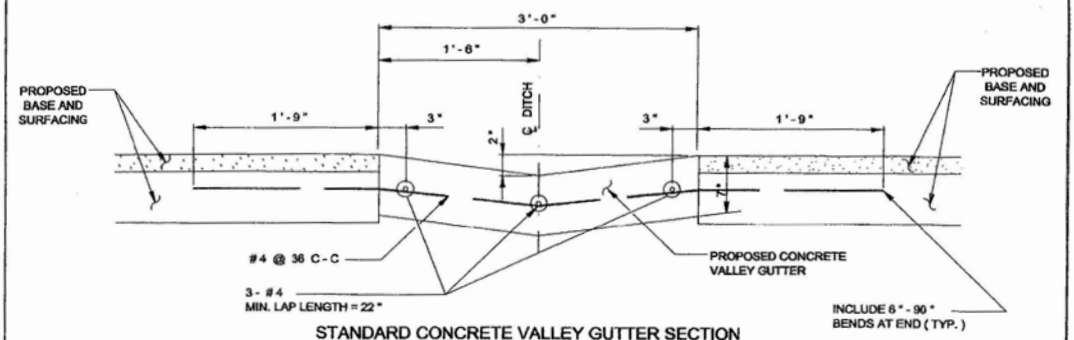

STANDARD CONCRETE VALLEY GUTTER SECTION

NTS

1. REINFORCED CONCRETE PIPE (RCP) CULVERTS AND CONCRETE VALLEY GUTTER GRADES SHALL BE SET BY CITY ENGINEER. PROFILE SHOWING THE PROPOSED AND EXISTING DITCH FLOWLINE WILL BE REQUIRED WHERE CONCRETE VALLEY GUTTERS ARE TO BE CONSTRUCTED IN LIEU OF CULVERTS.
2. CULVERT SIZE WILL BE APPROVED BY CITY ENGINEER WITH ~~18~~ 24" DIAMETER MINIMUM.
3. SPACING OF TYPE "D" OR "D - 1" INLETS SHALL BE DETERMINED BY CITY ENGINEER. SEE DRAWING NO. 02632 - 07 FOR TYPE "D" OR DRAWING NO. 02632 - 08 FOR TYPE "D - 1".
4. DRIVEWAY MAY BE CONCRETE, ASPHALT OR ANY OTHER MATERIAL WHICH WILL NOT PERMIT WIND OR WATERBORNE EROSION.
5. A 3 - FOOT CONCRETE VALLEY GUTTER SECTION SHALL BE CONSTRUCTED THROUGH THE PROPOSED DRIVEWAY WHERE THE CITY ENGINEER DETERMINES THE INSTALLATION OF DITCH CULVERTS TO BE IMPRACTICAL DUE TO INSUFFICIENT DEPTH. THE VALLEY GUTTER SECTION WILL BE CONSTRUCTED OF 5 - 1 / 2 SACK CEMENT PER CUBIC YARD OF CONCRETE.

CITY OF HOUSTON DEPARTMENT OF PUBLIC WORKS AND ENGINEERING	
DRIVEWAYS WITH CULVERTS OR VALLEY GUTTERS ON OPEN DITCH TYPE STREETS	
APPROVED BY: CITY ENGINEER	APPROVED BY: DIRECTOR OF PUBLIC WORKS AND ENGINEERING
DATE: 05 - 23 - 03	
DWG NO: 02754 - 02	

DRAWING 31-4

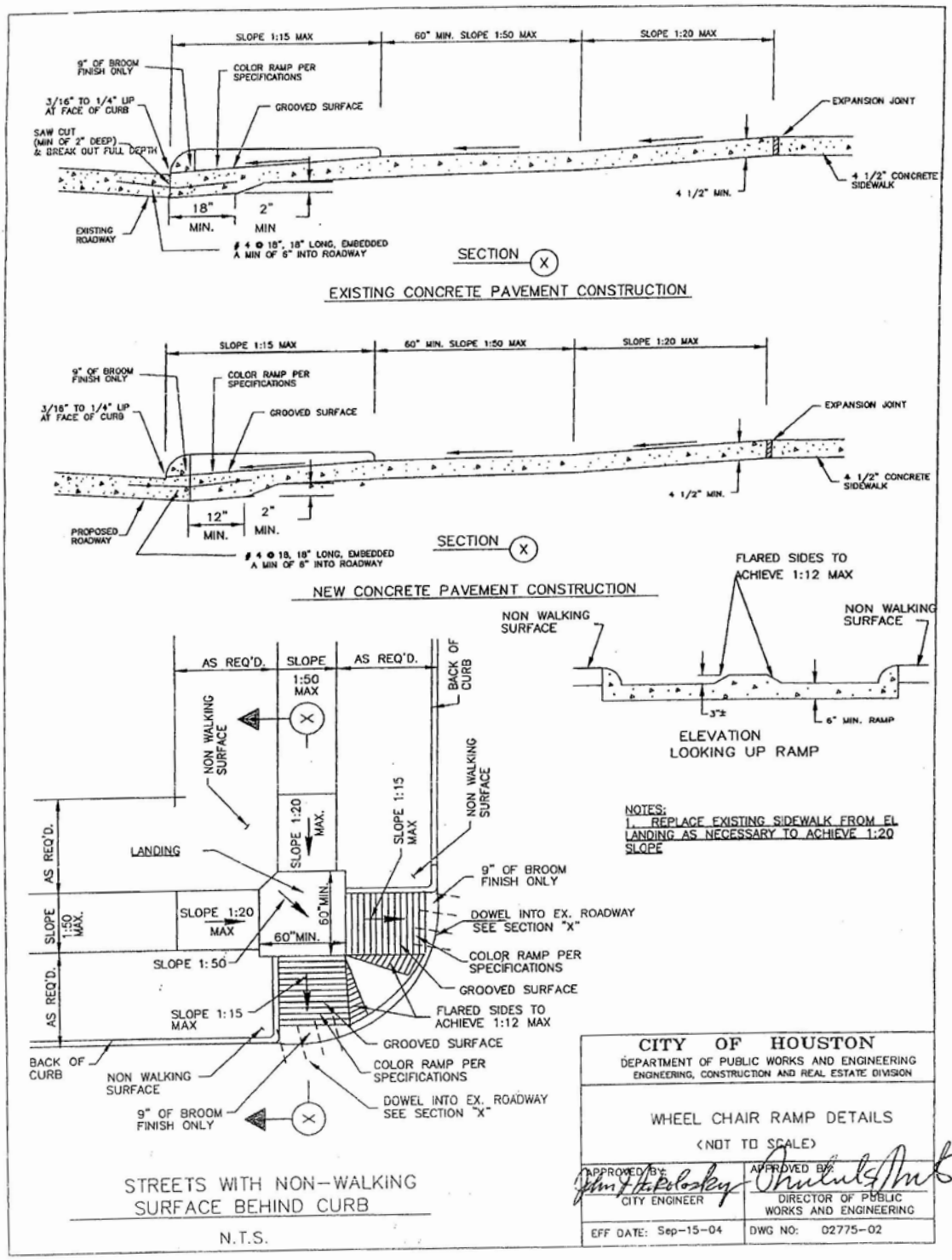

DRAWING 31-5a

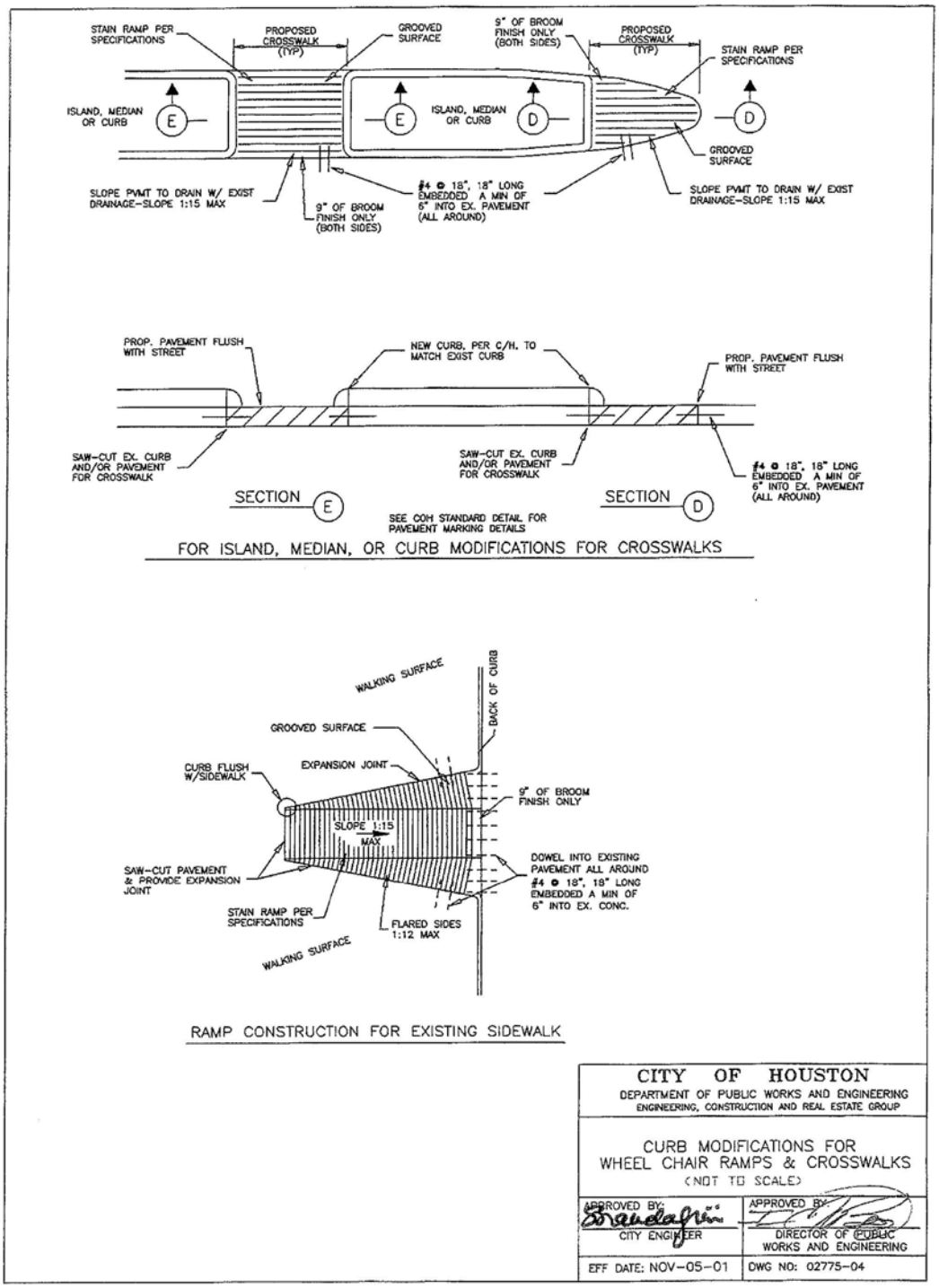

DRAWING 31-5b

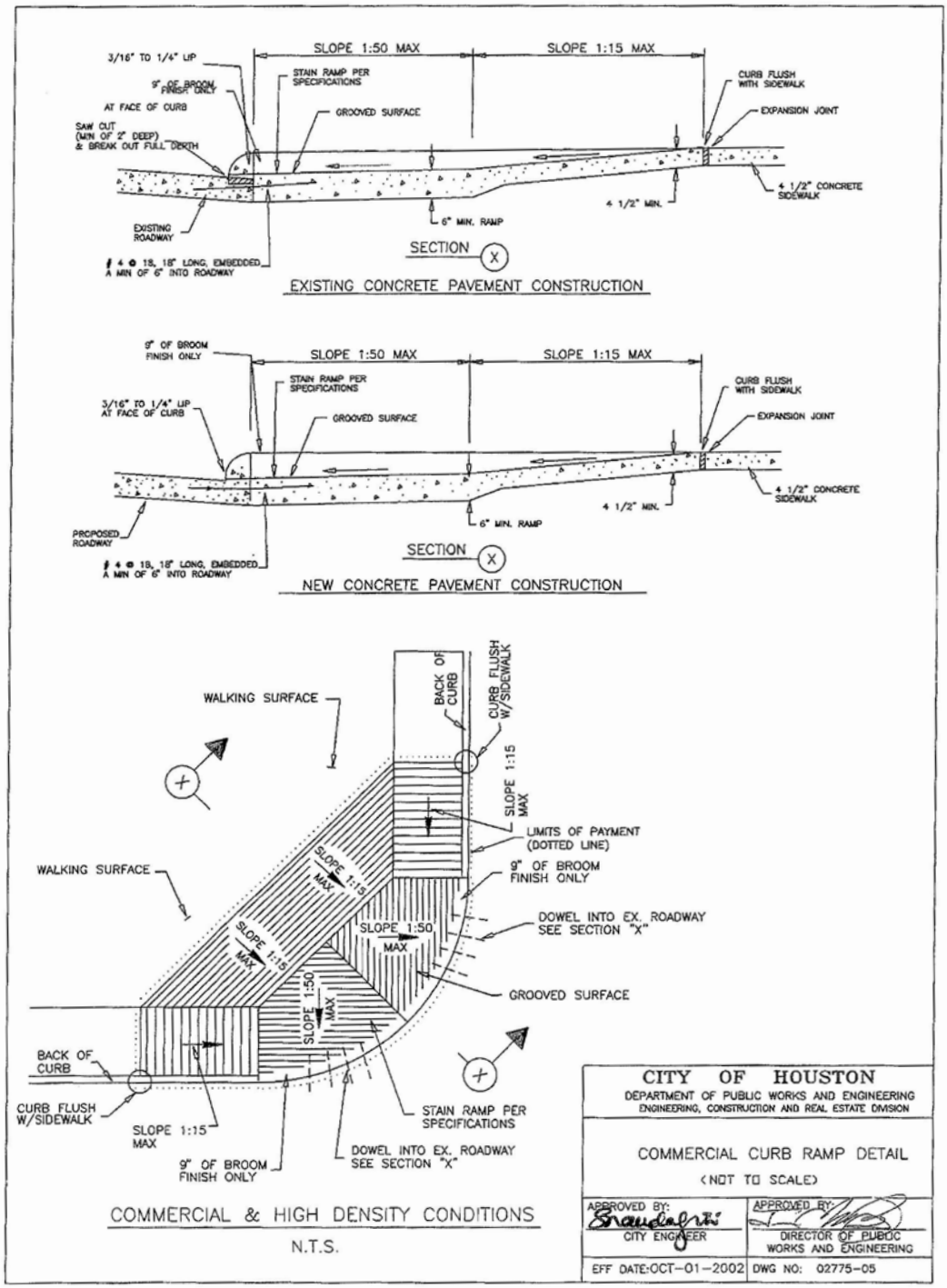

DRAWING 31-5c

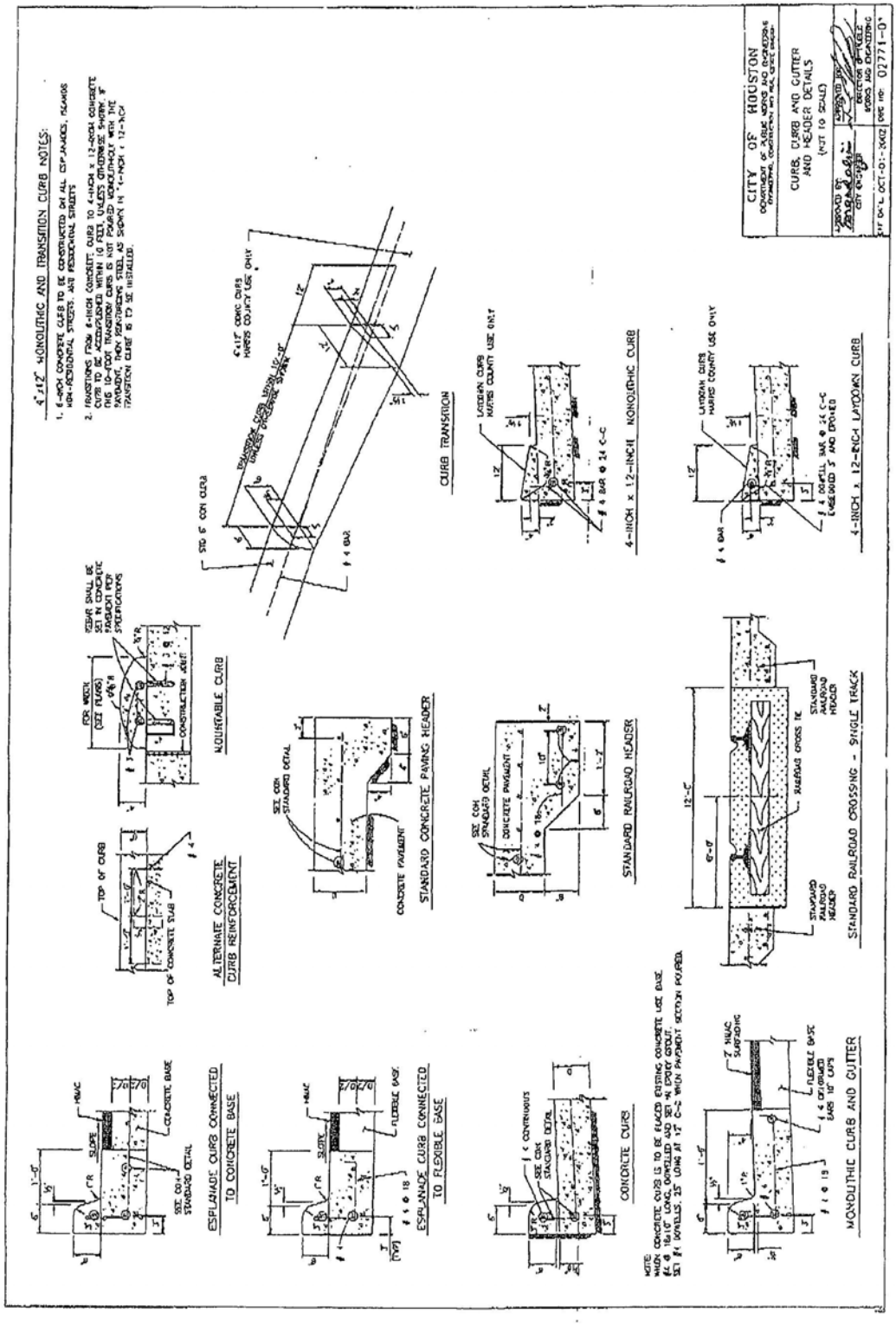
4"x12" MONOLITHIC AND TRANSITION CURB NOTES:
1. 6-INCH CONCRETE CURB TO BE CONSTRUCTED ON ALL ESPLANADES, MEDIANS NON-RESIDENTIAL STREETS, AND RESIDENTIAL STREETS
2. TRANSITIONS FROM 6-INCH CONCRETE CURB TO 4-INCH x 12-INCH CONCRETE CURB TO BE ESTABLISHED WITHIN 10 FEET, UNLESS OTHERWISE SHOWN. IF PAVEMENT, THEN REINFORCING STEEL NOT REQUIRED MONOLITHICALLY WITH THE TRANSITION CURB IS TO BE INSTALLED.
CURB TRANSITION
4-INCH x 12-INCH MONOLITHIC CURB
4-INCH x 12-INCH LAYDOWN CURB
MOUNTABLE CURB
ALTERNATE CONCRETE CURB REINFORCEMENT
STANDARD CONCRETE PAVING HEADER
STANDARD RAILROAD HEADER
STANDARD RAILROAD CROSSING - SINGLE TRACK
ESPLANADE CURB CONNECTED TO CONCRETE BASE
ESPLANADE CURB CONNECTED TO FLEXIBLE BASE
CONCRETE CURB
MONOLITHIC CURB AND GUTTER
CITY OF HOUSTON
CURB, CURB AND GUTTER AND HEADER DETAILS
(NOT TO SCALE)

DRAWING 31-6

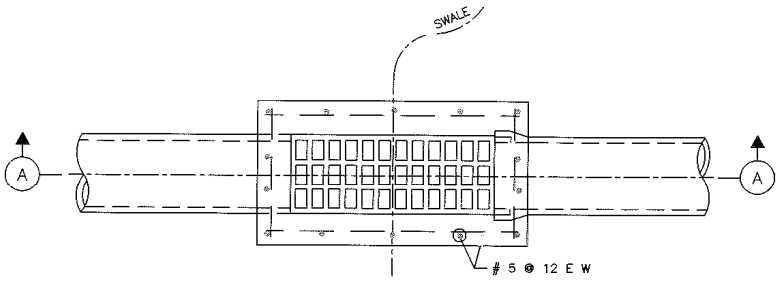

PLAN

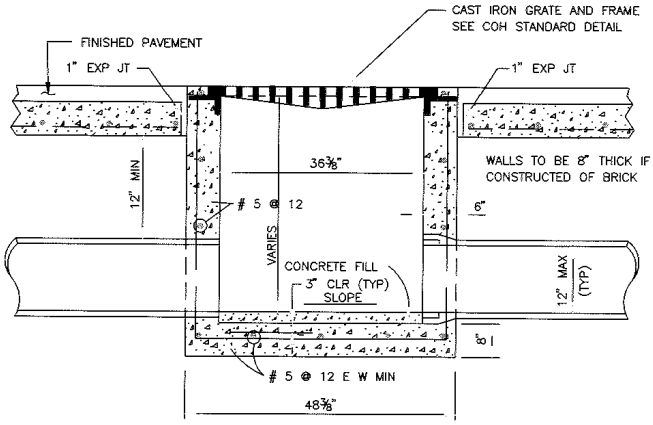

SECTION A

CITY OF HOUSTON DEPARTMENT OF PUBLIC WORKS AND ENGINEERING ENGINEERING, CONSTRUCTION AND REAL ESTATE DIVISION	
STORM SEWER TYPE "D" INLET (NOT TO SCALE)	
APPROVED BY: CITY ENGINEER	APPROVED BY: DIRECTOR OF PUBLIC WORKS AND ENGINEERING
EFF DATE: OCT-01-2002	DWG NO: 02632-07

Drawing 31-7

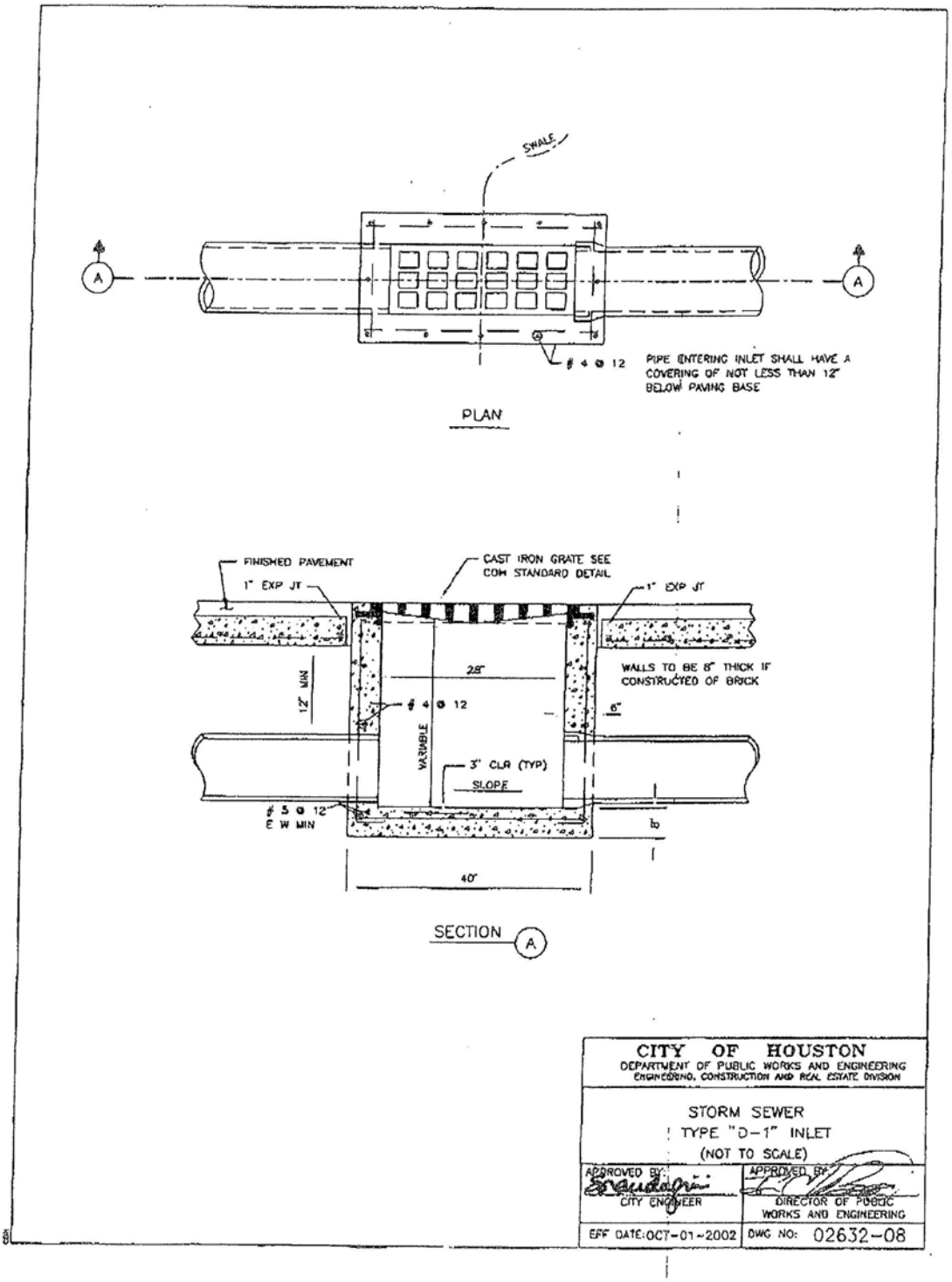
SWALE
A
A
4 @ 12
PIPE ENTERING INLET SHALL HAVE A COVERING OF NOT LESS THAN 12" BELOW PAVING BASE
PLAN
FINISHED PAVEMENT
1" EXP JT
CAST IRON GRATE SEE COH STANDARD DETAIL
1" EXP JT
WALLS TO BE 8" THICK IF CONSTRUCTED OF BRICK
28"
12" MIN
4 @ 12
6"
VARIABLE
3" CLR (TYP)
SLOPE
5 @ 12 E W MIN
40"
SECTION A
CITY OF HOUSTON
DEPARTMENT OF PUBLIC WORKS AND ENGINEERING
ENGINEERING, CONSTRUCTION AND REAL ESTATE DIVISION
STORM SEWER
TYPE "D-1" INLET
(NOT TO SCALE)
APPROVED BY:
CITY ENGINEER
APPROVED BY:
DIRECTOR OF PUBLIC WORKS AND ENGINEERING
EFF DATE: OCT-01-2002
DWG NO: 02632-08

DRAWING 31-8

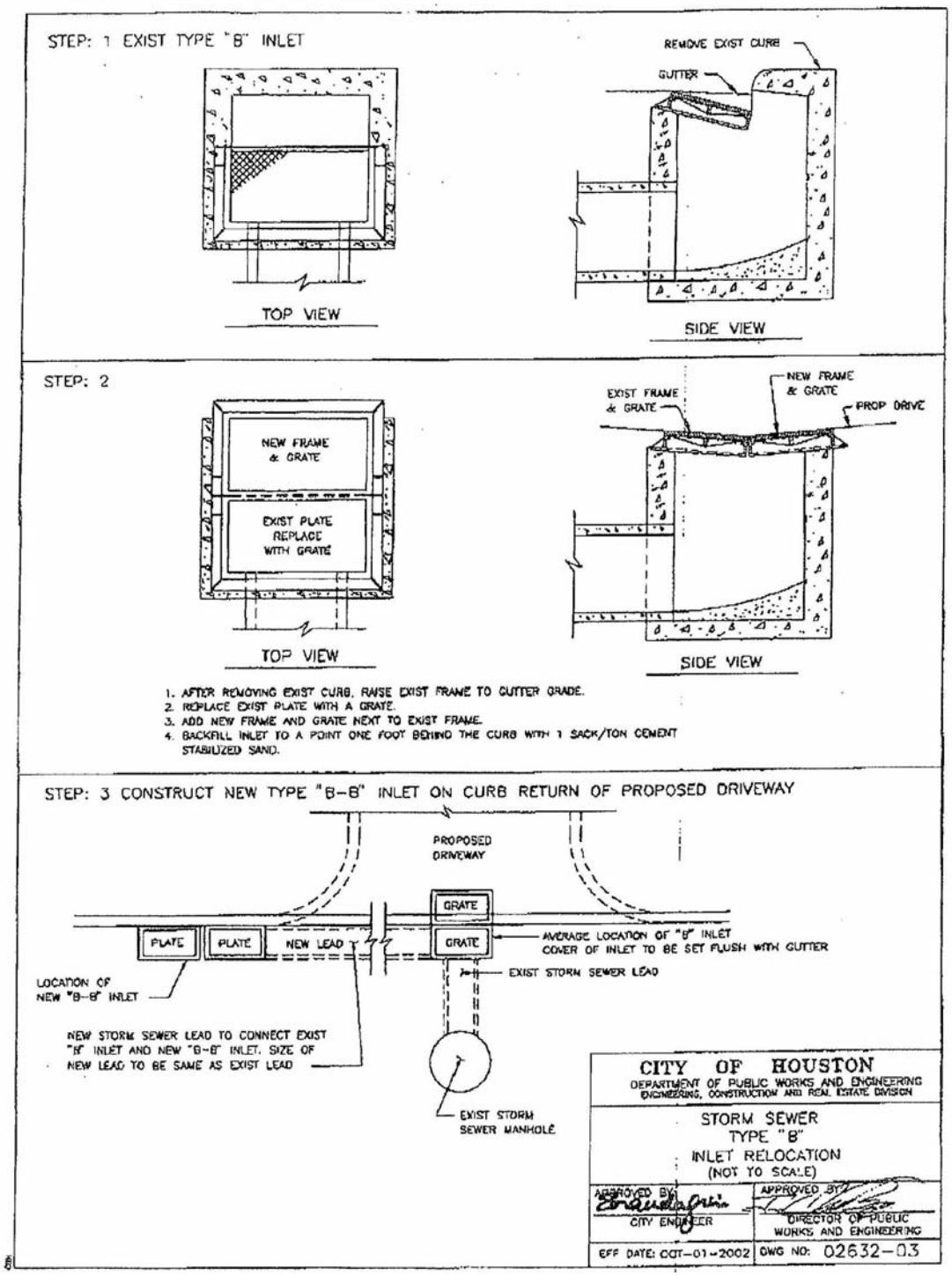
STEP: 1 EXIST TYPE "B" INLET
REMOVE EXIST CURB
GUTTER
TOP VIEW
SIDE VIEW
STEP: 2
NEW FRAME & GRATE
EXIST PLATE REPLACE WITH GRATE
EXIST FRAME & GRATE
NEW FRAME & GRATE
PROP DRIVE
TOP VIEW
SIDE VIEW
1. AFTER REMOVING EXIST CURB, RAISE EXIST FRAME TO GUTTER GRADE.
2. REPLACE EXIST PLATE WITH A GRATE.
3. ADD NEW FRAME AND GRATE NEXT TO EXIST FRAME.
4. BACKFILL INLET TO A POINT ONE FOOT BEHIND THE CURB WITH 1 SACK/TON CEMENT STABILIZED SAND.
STEP: 3 CONSTRUCT NEW TYPE "B-B" INLET ON CURB RETURN OF PROPOSED DRIVEWAY
PROPOSED DRIVEWAY
GRATE
PLATE
PLATE
NEW LEAD
GRATE
AVERAGE LOCATION OF "B" INLET COVER OF INLET TO BE SET FLUSH WITH GUTTER
EXIST STORM SEWER LEAD
LOCATION OF NEW "B-B" INLET
NEW STORM SEWER LEAD TO CONNECT EXIST "B" INLET AND NEW "B-B" INLET. SIZE OF NEW LEAD TO BE SAME AS EXIST LEAD
EXIST STORM SEWER MANHOLE
CITY OF HOUSTON
DEPARTMENT OF PUBLIC WORKS AND ENGINEERING
ENGINEERING, CONSTRUCTION AND REAL ESTATE DIVISION
STORM SEWER
TYPE "B"
INLET RELOCATION
(NOT TO SCALE)
APPROVED BY
CITY ENGINEER
APPROVED BY
DIRECTOR OF PUBLIC WORKS AND ENGINEERING
EFF DATE: OCT-01-2002
DWG NO: 02632-03

DRAWING 31-9

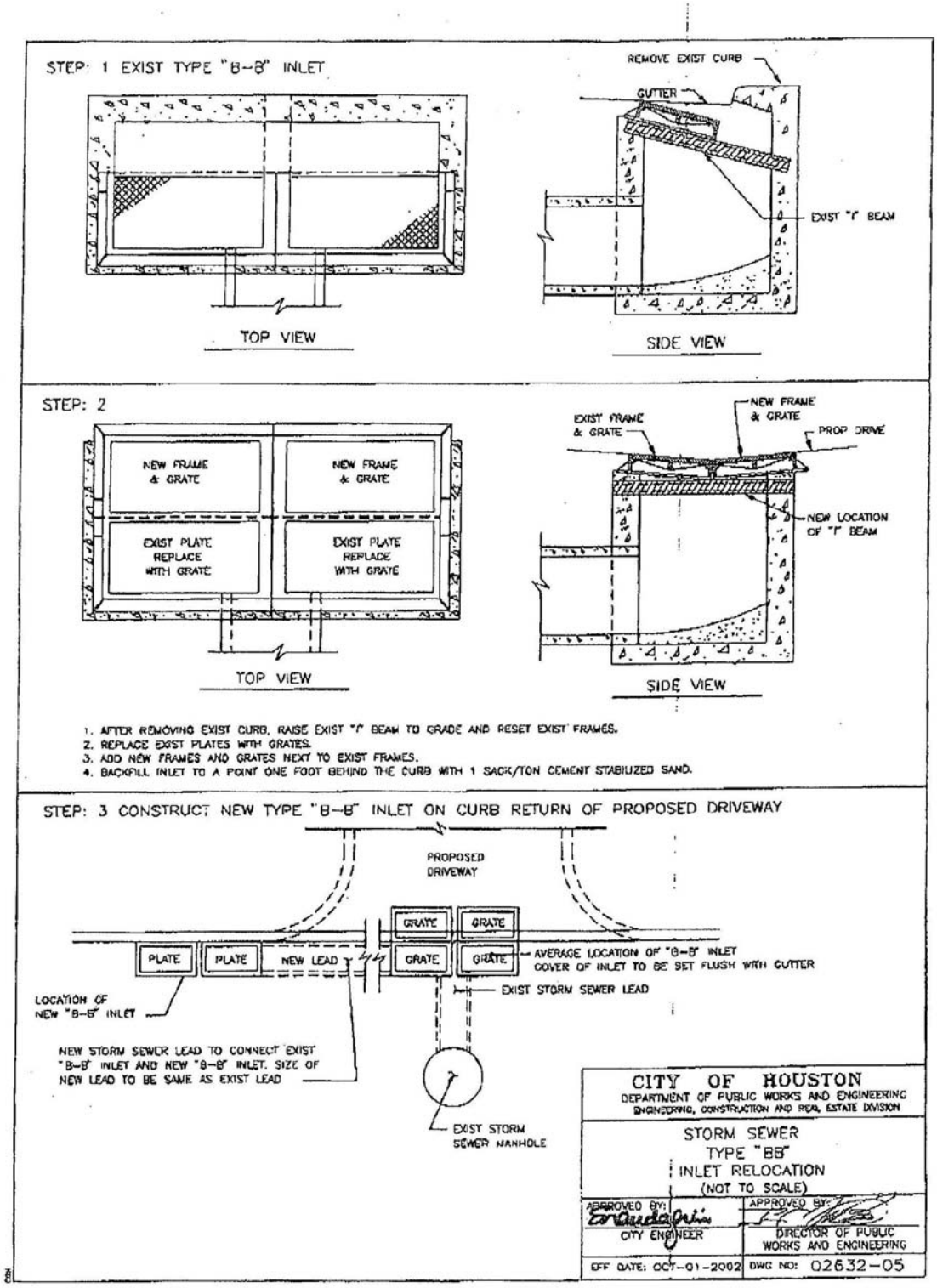

DRAWING 31-10

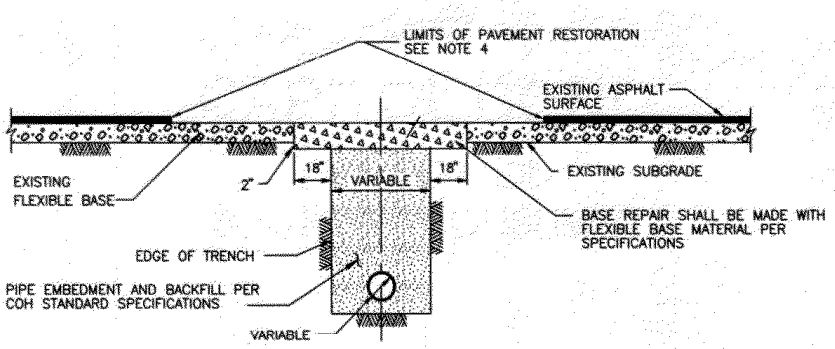

SECTION (A)

REPAIR OF FLEXIBLE BASE PAVEMENT

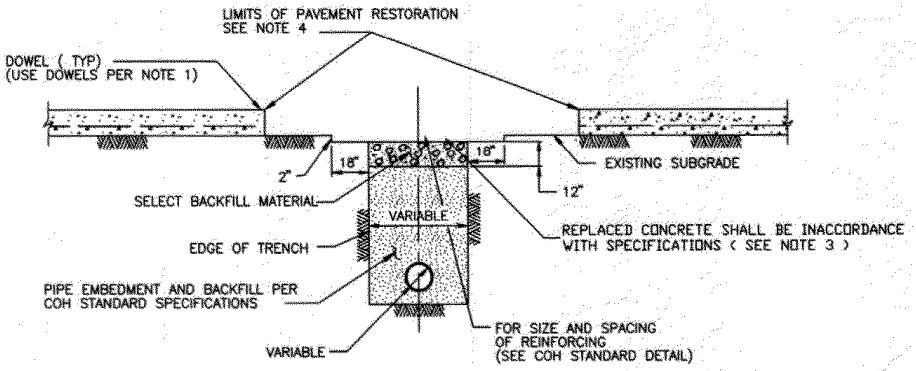

SECTION (B)

REPAIR OF REINFORCED CONCRETE PAVEMENT

NOTE:

1. EXPOSE 15" OF REINFORCING STEEL AT PROPOSED SAWED JOINT. IF NO REINFORCING STEEL EXISTS, USE HORIZONTAL DOWELS. HORIZONTAL DOWELS SHALL BE # 6 BARS, 24" LONG, 24" C-C, DRILLED AND EMBEDDED 8" INTO THE CENTER OF THE EXISTING SLAB. WITH "PO ROC" OR EQUAL.
2. IF REINFORCED CONCRETE IS OVERLAYED WITH ASPHALT, REPLACE WITH 2" MIN HMAC SURFACING.
3. REFER TO STANDARD DETAIL 02751-01 FOR REINFORCING STEEL REQUIREMENTS
4. REFER TO STANDARD DETAIL 02951-01 FOR PAVEMENT RESTORATION LIMITS.

CITY OF HOUSTON
DEPARTMENT OF PUBLIC WORKS AND ENGINEERING
ENGINEERING, CONSTRUCTION AND REAL ESTATE DIVISION

PAVEMENT REPAIR DETAILS
FOR STREET CUTS
(NOT TO SCALE)

APPROVED BY: CITY ENGINEER	APPROVED BY: DIRECTOR OF PUBLIC WORKS AND ENGINEERING
EFF DATE: OCT-01-2002	DWG NO: 02902-01

DRAWING 31-11a

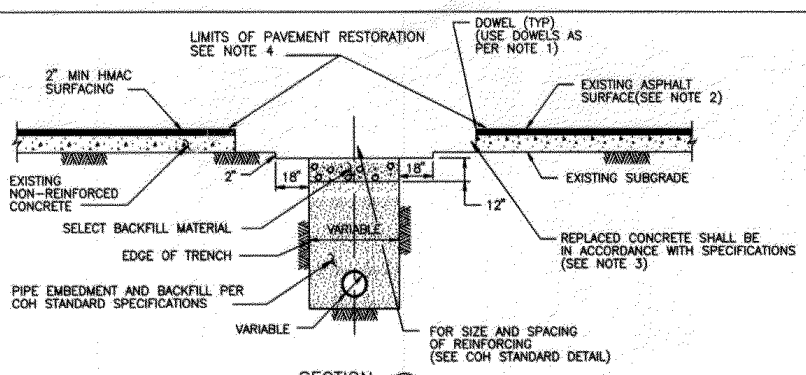

SECTION C

REPAIR OF NON-REINFORCED CONCRETE PAVEMENT

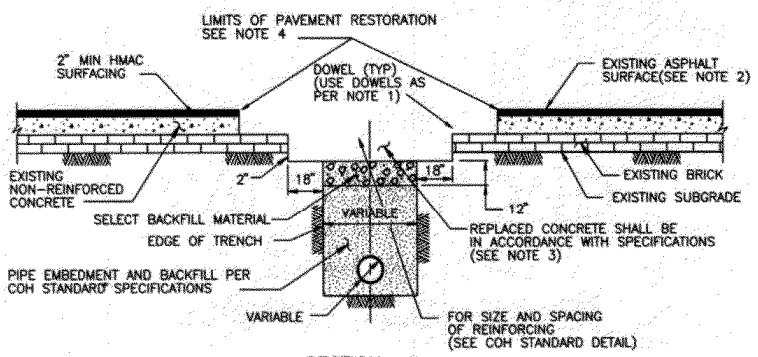

SECTION D

REPAIR OF NON-REINFORCED CONCRETE PAVEMENT WITH BRICK

NOTE:

1. EXPOSE 15" OF REINFORCING STEEL AT PROPOSED SAWED JOINT. IF NO REINFORCING STEEL EXISTS, USE HORIZONTAL DOWELS.
   HORIZONTAL DOWELS SHALL BE # 6 BARS, 24" LONG, 24" C-C, DRILLED AND EMBEDDED 8" INTO THE CENTER OF THE EXISTING SLAB. WITH "PO ROC" OR EQUAL.
2. IF REINFORCED CONCRETE IS OVERLAYED REPLACE WITH SAME THICKNESS OF HMAC SURFACING.
3. REFER TO STANDARD DETAIL 02751-01 FOR REINFORCING STEEL REQUIREMENT
4. REFER TO STANDARD DETAIL 02951-01 FOR PAVEMENT RESTORATION LIMITS.

CITY OF HOUSTON DEPARTMENT OF PUBLIC WORKS AND ENGINEERING ENGINEERING, CONSTRUCTION AND REAL ESTATE DIVISION	
PAVEMENT REPAIR DETAILS FOR STREET CUTS NON REINFORCED CONCRETE AND BRICK PAVEMENT (NOT TO SCALE)	
APPROVED BY: CITY ENGINEER	APPROVED BY: DIRECTOR OF PUBLIC WORKS AND ENGINEERING
EFF DATE: OCT-01-2002	DWG NO: 02902-02

DRAWING 31-11b

CONCRETE PAVEMENT RESTORATION

AGE OF PAVEMENT
LESS THAN OR EQUAL TO 5 YEARS

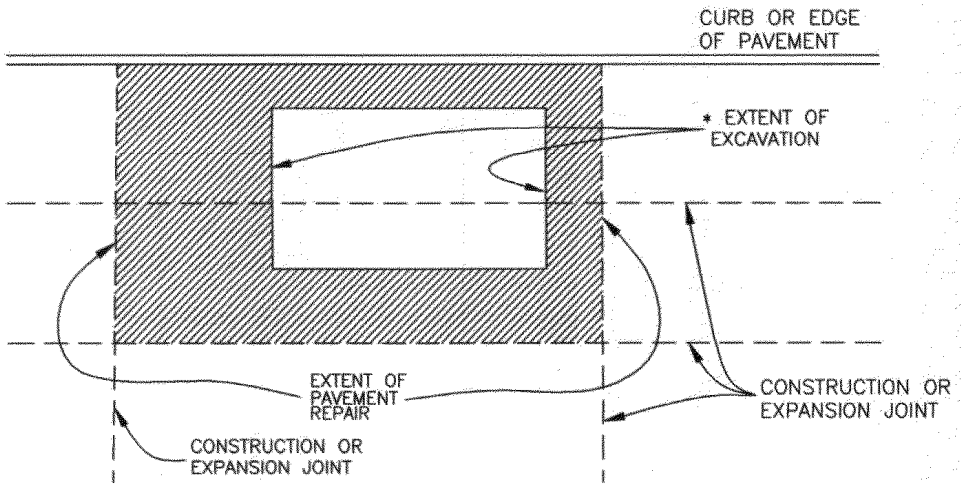

NOTES:

1. EXTENT OF PAVEMENT REPAIR SHALL BE PERPENDICULAR AND PARALLEL TO TRAVEL WAY.
2. REPLACE ENTIRE PANEL WIDTH AND LENGTH TO NEAREST CONSTRUCTION OR EXPANSION JOINT BEYOND EDGE OF EXCAVATION.
3. SAW CUT AND EXPOSE 15" OF REINFORCING STEEL WITHIN EXISTING PAVEMENT. PROVIDE HORIZONTAL DOWELS (PER SPECIFICATION SECTION 02902-01) IF EXISTING REINFORCING IS BROKEN OFF.
4. REPLACE CURB WHEN ADJACENT LANE IS REPLACED.
5. MAINTAIN EXPANSION JOINTS AT EXISTING LOCATIONS UNLESS OTHERWISE DIRECTED BY CITY ENGINEER.
6. SPECIALTY PAVEMENTS (IE: BRICK PAVERS) TO BE REPLACED WITH MATCHING PAVEMENT IN ALL CASES.
7. REPLACE PAVEMENT MARKINGS IN ACCORDANCE WITH CITY SPECIFICATIONS 02764 AND 02767.

* EXTENT OF EXCAVATION INCLUDES 18" OVERCUT AS SHOWN ON STANDARD DETAIL 02902-01.

CITY OF HOUSTON DEPARTMENT OF PUBLIC WORKS AND ENGINEERING ENGINEERING, CONSTRUCTION AND REAL ESTATE GROUP	
Street Cut Pavement Replacement CONCRETE PAVEMENT LESS THAN 5 YRS IN AGE (NOT TO SCALE)	
APPROVED BY: CITY ENGINEER	APPROVED BY: DIRECTOR OF PUBLIC WORKS AND ENGINEERING
EFF DATE: JUNE 2002	DWG NO: 02951-01

DRAWING 31-11c

CONCRETE PAVEMENT RESTORATION

AGE OF PAVEMENT GREATER THAN 5 YEARS

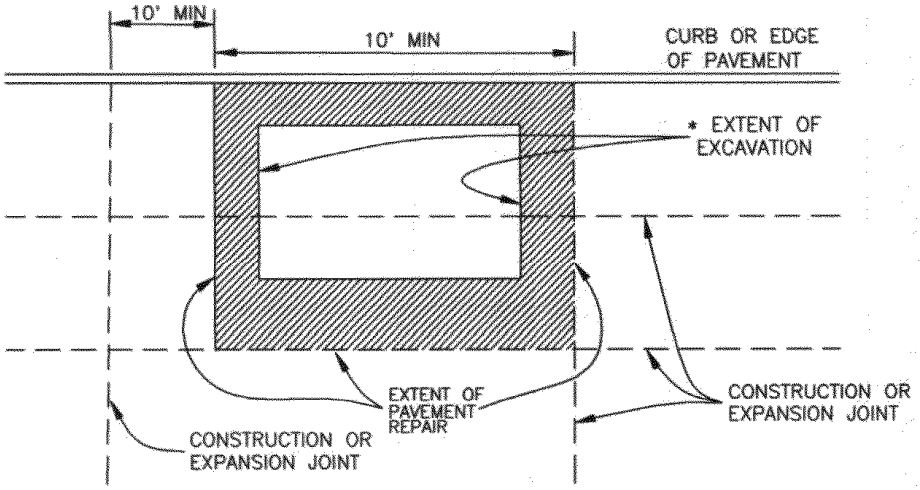

NOTES:

1. EXTENT OF PAVEMENT REPAIR SHALL BE PERPENDICULAR AND PARALLEL TO TRAVEL WAY.
2. WIDTH:
   REPLACE PANEL WIDTH TO NEAREST CONSTRUCTION OR EXPANSION JOINT BEYOND EDGE OF EXCAVATION.
3. LENGTH:
   a. MINIMUM LENGTH OF PAVEMENT REPAIR ALONG TRAVEL WAY IS 10' FROM THE NEAREST JOINT.
   b. IF EDGE OF EXCAVATION IS LESS THAN 10' FROM EXISTING CONSTRUCTION OR EXPANSION JOINT, REPLACE PAVEMENT TO EXISTING JOINT.
4. SAW CUT AND EXPOSE 15" OF REINFORCING STEEL AROUND EDGE OF PANEL REPLACEMENT. PROVIDE HORIZONTAL DOWELS (PER SPECIFICATION SECTION 02902-01) IF REINFORCING IS BROKEN OFF OR DOES NOT EXIST.
5. REPLACE CURB WHEN ADJACENT LANE IS REPLACED.
6. MAINTAIN EXPANSION JOINTS AT EXISTING LOCATIONS UNLESS OTHERWISE DIRECTED BY CITY ENGINEER.
7. SPECIALTY PAVEMENTS (IE: BRICK PAVERS) TO BE REPLACED WITH MATCHING PAVEMENT IN ALL CASES.
8. REPLACE PAVEMENT MARKINGS IN ACCORDANCE WITH CITY SPECIFICATIONS 02764 AND 02767.

* EXTENT OF EXCAVATION INCLUDES 18" OVERCUT AS SHOWN ON STANDARD DETAIL 02902-01.

CITY OF HOUSTON DEPARTMENT OF PUBLIC WORKS AND ENGINEERING ENGINEERING, CONSTRUCTION AND REAL ESTATE GROUP	
Street Cut Pavement Replacement CONCRETE PAVEMENT OVER 5 YRS IN AGE (NOT TO SCALE)	
APPROVED BY: CITY ENGINEER	APPROVED BY: DIRECTOR OF PUBLIC WORKS AND ENGINEERING
EFF DATE: JUNE 2002	DWG NO: 02951-02

DRAWING 31-11d

ASPHALT PAVEMENT RESTORATION

FOR PAVEMENT OF ALL AGES

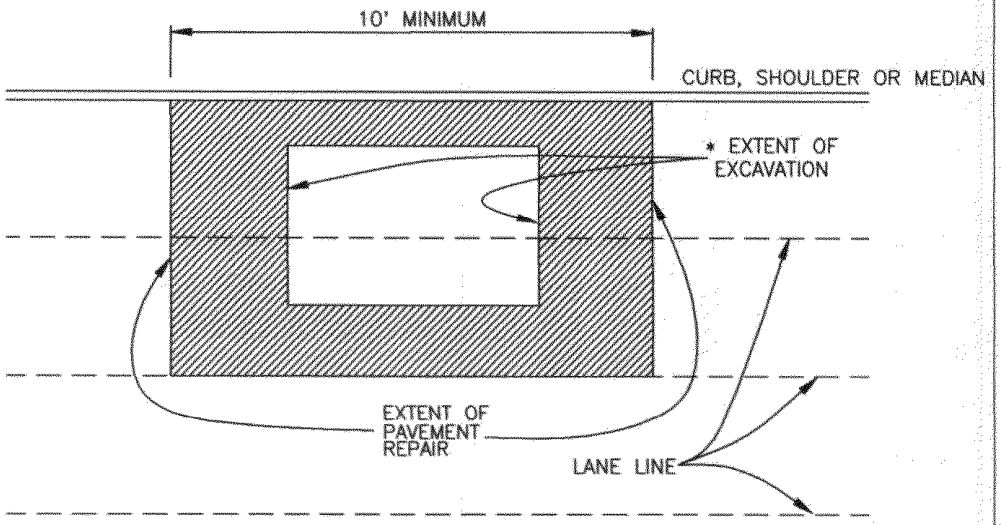

NOTES:

1. EXTENT OF PAVEMENT REPAIR SHALL BE PERPENDICULAR AND PARALLEL TO TRAVEL WAY.

2. FLEXIBLE BASE:

REPLACE BASE TO SAME THICKNESS PLUS TWO INCHES (2") FOR EXTENT OF EXCAVATION. USE APPROVED BASE MATERIAL TYPE. *

3. SURFACE COURSE:

A. WIDTH:
SURFACE MILL AND OVERLAY FULL WIDTH OF LANE(S) TO NEAREST LANE DIVIDER BEYOND EDGE OF EXCAVATION.

B. LENGTH:
MINIMUM LENGTH OF SURFACE MILL ALONG TRAVEL WAY IS 10'.

C. REPLACE PAVEMENT MARKINGS IN ACCORDANCE WITH CITY SPECIFICATIONS 02764 & 02767.

ADDITIONAL REQUIREMENTS FOR ASPHALT OVERLAY ON CONCRETE PAVEMENT:

1. REPLACE CONCRETE FOR EXTENT OF EXCAVATION. REPLACE TO SAME THICKNESS PLUS TWO INCHES (2").
2. WIDTH:
IF EXCAVATION EXTENDS MORE THAN HALF OF A LANE, REPLACE ENTIRE LANE OF CONCRETE. OTHERWISE USE STANDARD DETAIL 02902-01.
3. SAW CUT AND EXPOSE 15" OF REINFORCING STEEL AROUND EDGE OF CONCRETE REPLACEMENT. IF NO REINFORCING STEEL EXISTS, USE HORIZONTAL DOWELS PER SPECIFICATION SECTION 02902.
4. REPLACE CURB WHEN ADJACENT LANE IS REPLACED.
5. MAINTAIN CONCRETE EXPANSION JOINTS AT EXISTING LOCATIONS UNLESS OTHERWISE APPROVED BY CITY ENGINEER.

* EXTENT OF EXCAVATION INCLUDES 18" OVERCUT AS SHOWN ON STANDARD DETAIL 02902-01.

CITY OF HOUSTON DEPARTMENT OF PUBLIC WORKS AND ENGINEERING ENGINEERING, CONSTRUCTION AND REAL ESTATE GROUP	
Street Cut Pavement Replacement ASPHALT PAVEMENT FOR PAVEMENT OF ALL AGES (NOT TO SCALE)	
APPROVED BY: CITY ENGINEER	APPROVED BY: DIRECTOR OF PUBLIC WORKS AND ENGINEERING
EFF DATE: JUNE 2002	DWG NO: 02951-03

DRAWING 31-11e

NOTE:

1. GALVANIZE GRATE AFTER FABRICATION.

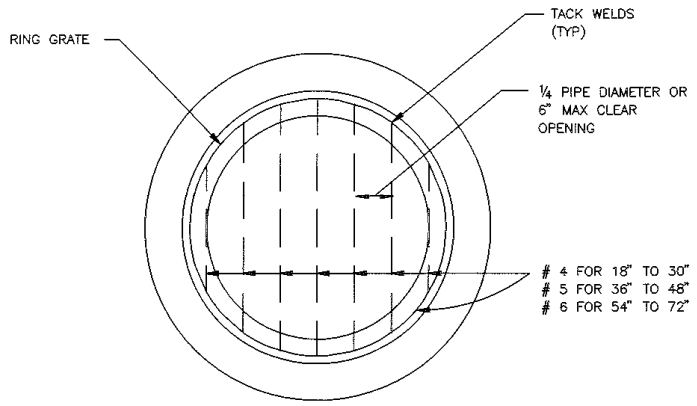

END VIEW

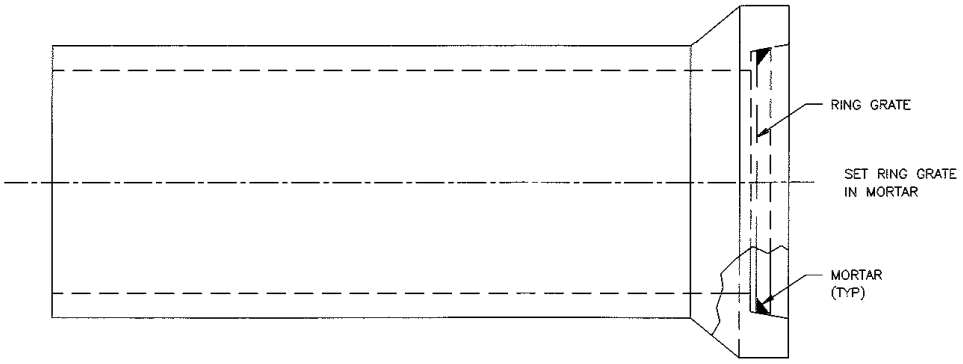

SIDE VIEW

CITY OF HOUSTON DEPARTMENT OF PUBLIC WORKS AND ENGINEERING ENGINEERING, CONSTRUCTION AND REAL ESTATE DIVISION	
STORM SEWER RING GRATE FOR OPEN END OF 18" TO 72" RCP STUBS TO DITCH (NOT TO SCALE)	
APPROVED BY: CITY ENGINEER	APPROVED BY: DIRECTOR OF PUBLIC WORKS AND ENGINEERING
EFF DATE: OCT-01-2002	DWG NO: 02084-11

COH

DRAWING 31-12

CHAPTER 32

ENCROACHMENTS INTO THE PUBLIC RIGHT-OF-WAY

3202.1.1 Structural support. A part of a building erected below grade that is necessary for structural support of the building or structure shall not project beyond the lot lines, except that the footings of street walls or their supports which are located at least 8 feet (2438 mm) below grade shall not project more than ~~12~~ 24 inches (~~305~~ 610 mm) beyond the street lot line.

3202.2 Encroachments above grade and below 8 feet in height. Encroachments into the public right-of-way above grade and below 8 feet (2438 mm) in height shall be prohibited except as provided for in Sections 3202.2.1 through 3202.2.3. ~~Doors and windows shall not open or project into the public right-of-way.~~ Projections shall not encroach within the required width of a sidewalk.

3202.2.4 Doors. Power-operated doors and their guide rails shall not project over public property. Other doors, either when fully opened or when opening, shall not project more than 3 feet (915 mm) beyond the property line, except that in alleys no projection beyond the property line is permitted.

> **Exception:** Doors that do not encroach within the required width of a sidewalk and that will not interfere with the sidewalk flow of pedestrian traffic as determined by the building official.

3202.3.1 Awnings, canopies, and marquees ~~and signs~~. Awnings, canopies, and marquees ~~and signs~~ shall be constructed so as to support applicable loads as specified in Chapter 16. Awnings, canopies, and marquees ~~and signs with less than 15 feet (4572 mm) clearance above the sidewalk~~ shall not extend into or occupy more than two-thirds the width of the sidewalk measured from the building. Stanchions or columns that support awnings, canopies, marquees and signs shall be located not less than 2 feet (610 mm) in from the curb line.

3202.3.3 ~~Encroachments 15 feet or more above grade.~~ ~~Encroachments 15 feet (4572 mm) or more above grade shall not be limited.~~ **Entrance-type canopy.** Entrance-type canopies may have combustible coverings supported on noncombustible frames. The lowest part of such frames shall be not less than 8 feet (2438 mm) above the grade immediately below, and the lowest part of any fringe attached to the covering shall be not less than 7 feet (2133 mm) above the grade immediately below. The horizontal clearance between the entrance-type canopy and curb line shall be not less than 2 feet (610 mm). In any case, where posts may be necessary for support at the street end of such canopies, such posts shall be installed 2 feet (610 mm) from the curb line. There shall not be any other such post on public property between these outer posts and the property line. Such canopies shall not be wider than 12 feet (3658 mm).

3202.3.4 Pedestrian walkways. The installation of a pedestrian walkway over a public right-of-way shall be subject to the approval of local authority having jurisdiction. ~~The vertical clearance from the public right-of-way to the lowest part of a pedestrian walkway shall be 15 feet (4572 mm) minimum.~~

~~**3202.4 Temporary encroachments.** Where allowed by the local authority having jurisdiction, vestibules and storm enclosures shall not be erected for a period of time exceeding 7 months in any one year and shall not encroach more than 3 feet (914 mm) nor more than one-fourth of the width of the sidewalk beyond the street lot line. Temporary entrance awnings shall be erected with a minimum clearance of 7 feet (2134 mm) to the lowest portion of the hood or awning where supported on removable steel or other approved noncombustible support.~~

CHAPTER 33

SAFEGUARDS DURING CONSTRUCTION

3302.2 ~~**Manner of removal.** Waste materials shall be removed in a manner which prevents injury or damage to persons, adjoining properties and public rights-of-way.~~ **Construction or demolishing privileges.** Earth taken from excavations and materials or rubbish taken from buildings from day to day shall not be left upon the sidewalks or streets but shall be removed as rapidly as accumulated. When such materials are dry and likely to produce a dust when handled, they shall be kept moist so as to prevent the wind blowing the same about.

(CW) 3303.7 Foundation. All concrete slabs shall be removed in conjunction with the demolition of the corresponding structure.

Exception: When a written request is submitted by the applicant and approved by the building official to use the foundation for an alternate use.

3304.1 ~~**Excavation and fill.** Excavation and fill for buildings and structures shall be constructed or protected so as not to endanger life or property. Stumps and roots shall be removed from the soil to a depth of at least 12 inches (305 mm) below the surface of the ground in the area to be occupied by the building. Wood forms which have been used in placing concrete, if within the ground or between foundation sills and the ground, shall be removed before a building is occupied or used for any purpose. Before completion, loose or casual wood shall be removed from direct contact with the ground under the building.~~ **Permanent excavation.** Permanent excavations shall be protected by permanent means where necessary to prevent the movement of the earth of adjoining properties. Such protection shall be provided by the person causing the excavations to be made and shall be on the property and at the expense of the person causing the excavation to be made. The building official may require excavations that are not otherwise protected to be protected by the construction of a substantial barricade or fence not less than 6 feet (1829 mm) in height enclosing the excavated area.

3304.1.1 ~~**Slope limits.** Slopes for permanent fill shall not be steeper than one unit vertical in two units horizontal (50-percent slope). Cut slopes for permanent excavations shall not be steeper than one unit vertical in two units horizontal (50-percent slope). Deviation from the foregoing limitations for cut slopes shall be permitted only upon the presentation of a soil investigation report acceptable to the building official.~~ **Grading of filling.** When a lot or plot is graded to a higher or lower finished grade level than the natural grade on adjacent property, the owner of such lot or plot shall provide a retaining wall or walls on his/her own property to protect the adjacent property from caving of earth or overflow of water.

3304.1.2 ~~**Surcharge.** No fill or other surcharge loads shall be placed adjacent to any building or structure unless such building or structure is capable of withstanding the additional loads caused by the fill or surcharge. Existing footings or foundations which can be affected by any excavation shall be underpinned adequately or otherwise protected against settlement and shall be protected against later movement.~~ **Notification of adjoining property owners.** When the safety of adjoining buildings or other structures may be affected by a proposed excavation, the owners of such adjoining buildings or other structures shall be notified not less than 10 days before such excavation is commenced by the person proposing to do such excavating. Such notice shall be in writing and shall state the depth and location of the proposed excavation.

~~**3304.1.3 Footings on adjacent slopes.** For footings on adjacent slopes, see Chapter 18.~~ **Access to adjoining property.** When any proposed excavation may, because of location, site, conditions or method of excavation, affect the existing conditions of adjoining buildings or other structures, the owners of such adjoining buildings or structures may grant the person proposing to do such excavating permission to enter their properties for the purpose of physical examination of their properties prior to the commencement of excavating, and at reasonable periods thereafter during the progress of the excavating work. If the person causing an excavation to be made is granted permission to enter adjoining premises for the purpose of supporting adjoining property, or for the purpose of supporting or protecting adjoining buildings or other structures, he/she shall provide adequate protection for such adjoining premises, building or other structures against damage resulting from his/her operation. If such permission is not granted, the owner of such adjoining premises, building or other structure shall be responsible for its maintenance, support, or protection at his/her own expense, and for that purpose he/she shall be granted permission to enter the premises where the excavation is to be, or is, made. In either case, the person granted the right of entry upon adjacent property shall perform the necessary work within a reasonable time and without injury to the person or persons permitting such entry.

~~**3304.1.4 Fill supporting foundations.** Fill to be used to support the foundations of any building or structure shall comply with Section 1803.4. Special inspections of compacted fill shall be in accordance with Section 1704.7.~~ **Failure to comply.** If the person whose duty it is under the provisions of this code to make safe an excavation, to prevent the movement of adjoining earth, or to maintain, support, or protect adjoining buildings or other structures shall neglect or fail to do so, the building official shall notify such person in writing of his/her duties under the provisions of this code, If such person shall fail to perform the duty required by this code within such reasonable time after receipt of such notice as allowed by the building official, the building official may cause such work to be stopped until such person complies with this code.

3304.1.5 Drainage. Whenever the surface of a lot or plot is excavated, filled or graded, catch basins or connected underdrains shall be installed to preclude the accumulation of surface water. Surface water shall not be drained onto adjacent property that is not in the same ownership without written permission from the owner of the adjacent property, and existing natural ground drainage of the ground area surrounding the lot or plot that is excavated, filled, or graded shall not be obstructed. No condition shall be created nor any existing condition maintained whereby there will be upon any lot or plot excavations, depressions, pits, holes, gullies or other depressions that may accumulate and retain surface water. Any such condition shall be promptly abated and protected by filling in or by providing drainage as set forth above.

3304.1.6 Sandblasting. Dry sandblasting shall be prohibited except in enclosed areas. Wet sandblasting may be permitted, provided that measures are taken to prevent sand and other residue from falling or drifting onto public property or property of others.

3304.1.7 Tree and Shrub Ordinance compliance. See City Code Chapter 33, Article V for requirements regarding grading and construction within the dripline area of protected trees.

SECTION 3305

~~SANITARY~~

PREPARATION OF BUILDING SITE, ETC.

~~**3305.1 Facilities required.** Sanitary facilities shall be provided during construction, remodeling or demotion activities in accordance with the *International Plumbing Code*.~~ **Removal of stumps, roots, and**

lumber. All stumps and roots shall be removed from the soil to a depth of at least 12 inches (305 mm) below the surface of the ground in the area to be occupied by the building.

All wood forms that have been used in placing concrete, if within the ground or between foundation sills and the ground, shall be removed before a building is occupied or used for any purpose. Before completion, loose or casual wood shall be removed from direct contact with the ground under the building.

3307.1 Protection required. Adjoining public and private property shall be protected from damage during construction, remodeling and demolition work. Protection must be provided for footings, foundations, party walls, chimneys, skylights and roofs. Provisions shall be made to control water run-off and erosion during construction or demolition activities. The person making or causing an excavation to be made shall provide written notice to the owners of adjoining buildings advising them that the excavation is to be made and that the adjoining buildings should be protected. Said notification shall be delivered not less than 10 days prior to the scheduled starting date of the excavation.

The person causing any excavation to be made shall prevent the movement of the earth of adjoining properties and the trees and natural objects thereon or therein, and shall be responsible for maintaining or restoring public sidewalks, curbs and pavements, and the properties of public utilities that may be affected by the excavation. The maintenance or restoration of sidewalks, curbs and pavements shall be performed in accordance with the grades, levels and other requirements of the jurisdiction's Department of Public Works and Engineering, and the maintenance or restoration of the property of public utilities shall be in accordance with the procedures established by the owners thereof for new construction.

~~**[F]**~~ **3309.1 Reserved.** ~~**Where required.** All structures under construction, alteration or demolition shall be provided with not less than one approved portable fire extinguisher in accordance with Section 906 and sized for not less than ordinary hazard as follows:~~

~~1. At each stairway on all floor levels where combustible materials have accumulated.~~

~~2. In every storage and construction shed.~~

~~3. Additional portable fire extinguishers shall be provided where special hazards exist, such as the storage and use of flammable and combustible liquids.~~

~~**3309.2 Fire hazards.** The provisions of this code and the *International Fire Code* shall be strictly observed to safeguard against all fire hazards attendant upon construction operations~~.

3310.1 ~~**Stairways required.** Where a building has been constructed to a height greater than 50 feet (15 240 mm)or four stories, or where an existing building exceeding 50 feet (15 240 mm)in height is altered, at least one temporary lighted stairway shall be provided unless one or more of the permanent stairways are erected as the construction progresses.~~

~~**3310.2**~~ **Maintenance of exits.** Required means of egress shall be maintained at all times during construction, demolition, remodeling or alterations and additions to any building.

Exception: Approved temporary means of egress systems and facilities.

3311.4 ~~**Water supply.** Water supply for fire protection, either temporary or permanent, shall be made available as soon as combustible material accumulates.~~ **Temporary standpipes.** Temporary standpipes may be provided in place of permanent systems if they are designed to furnish a minimum of 500 gallons (1893 L) of water per minute at 50 pounds (345 kPa) per square inch pressure with a standpipe size of not less than 4 inches (102 mm). All outlets shall not be less than 2 ½ inches (63.5 mm). Pumping equipment

sufficient to provide this pressure and volume shall be available at all times when the building reaches 150 feet (45.72 m) above grade.

~~**3312.2 Operation of valves.** Operation of sprinkler control valves shall be permitted only by properly authorized personnel and shall be accompanied by notification of duly designated parties. When the sprinkler protection is being regularly turned off and on to facilitate connection of newly completed segments, the sprinkler control valves shall be checked at the end of each work period to ascertain that protection is in service.~~

SECTION 3313

TRENCH SAFETY

3313.1 Requirements. See Subchapter C of Chapter 756 of the Texas Health and Safety Code for requirements applicable to trench safety. It is the responsibility of the owner to assure compliance with applicable state and federal laws, and no provision of this code shall be deemed to excuse compliance with applicable state and federal requirements for trench safety.

CHAPTER 34

EXISTING STRUCTURES

3401.3 Compliance with other codes. Alterations, repairs, additions and changes of occupancy to existing structures shall comply with the provisions for alterations, repairs, additions and changes of occupancy in the *City of Houston Construction Code* and the *Fire Code*. ~~*International Fire Code*, *International Fuel Gas Code*, *International Plumbing Code*, *International Property Maintenance Code*, *International Private Sewage Disposal Code*, *International Mechanical Code*, *International Residential Code* and ICC *Electrical Code*.~~

[EB] SECTION 3402

DELETE AND RESERVE ENTIRE SECTION

3403.1 ~~**Existing buildings or structures.** Additions or alterations to any building or structure shall conform with the requirements of the code for new construction. Additions or alterations shall not be made to an existing building or structure which will cause the existing building or structure to be in violation of any provisions of this code. An existing building plus additions shall comply with the height and area provisions of Chapter 5. Portions of the structure not altered and not affected by the alteration are not required to comply with the code requirements for a new structure~~. **General.** Buildings and structures to which additions, alterations or repairs are made shall comply with all the requirements of this code for new facilities except as specifically provided in this section. See Section 907 for provisions requiring installation of smoke detectors in existing Group R-3 occupancies.

> ~~**Exception:** For buildings and structures in flood hazard areas established in Section 1612.3, any additions, alterations or repairs that constitute substantial improvement of the existing structure, as defined in Section 1612.2, shall comply with the flood design requirements for new construction and all aspects of the existing structure shall be brought into compliance with the requirements for new construction for flood design.~~

3403.2 ~~**Structural.** Additions or alterations to an existing structure shall not increase the force in any structural element by more than 5 percent, unless the increased forces on the element are still in compliance with the code for new structures, nor shall the strength of any structural element be decreased to less than that required by this code for new structures. Where repairs are made to structural elements of an existing building, and uncovered structural elements are found to be unsound or otherwise structurally deficient, such elements shall be made to conform to the requirements for new structures.~~ **When allowed.** Additions, alterations or repairs may be made to any building or structure without requiring the existing building or structure to comply with all the requirements of this code, provided the addition, alteration or repair conforms to that required for a new building or structure.

Additions or alterations shall not be made to an existing building or structure that will cause the existing building or structure to be in violation of any of the provisions of this code, and such additions or alterations shall not cause the existing building or structure to become unsafe. An unsafe condition shall be deemed to have been created if an addition or alteration will cause the existing building or structure to become structurally unsafe or overloaded, will not provide adequate egress in compliance with the provisions of this code or will obstruct existing exits, will create a fire hazard, will reduce required fire resistance, or will otherwise create conditions dangerous to human life. Any building so altered, which

involves a change in use or occupancy, shall not exceed the height, number of stories and area permitted for new buildings. Any building plus new additions shall not exceed the height, number of stories and area specified for new buildings.

Additions or alterations shall not be made to an existing building or structure when such existing building or structure is not in full compliance with the provisions of this code except when such addition or alteration will result in the existing building or structure being no more hazardous based on life safety, fire safety and sanitation, than before such additions or alterations are undertaken. (See also Section 415.9 for Group H-5 occupancies.)

Exception: Alterations of existing structural elements, or additions of new structural elements, which are not required by this code and are initiated for the purpose of increasing the lateral-force-resisting strength or stiffness of an existing structure, need not be designed for forces conforming to these regulations provided that an engineering analysis is submitted to show that:

1. The capacity of existing structural elements required to resist forces is not reduced;

2. The lateral loading to required existing structural elements is not increased beyond their capacity;

3. New structural elements are detailed and connected to the existing structural elements as required by these regulations;

4. New or relocated nonstructural elements are detailed and connected to existing or new structural elements as required by these regulations; and

5. An unsafe condition as defined above is not created.

3406.1 Conformance. No change shall be made in the use or occupancy of any building that would place the building in a different division of the same group of occupancy or in a different group of occupancies, unless such building is made to comply with the requirements of this code for such division or group of occupancy. Subject to the approval of the building official, the use or occupancy of existing buildings shall be permitted to be changed and the building is allowed to be occupied for purposes in other groups without conforming to all the requirements of this code for those groups, provided the new or proposed use is equal to or less hazardous, based on life and fire risk, than the existing use.

3407.1 Historic buildings. ~~The provisions of this code relating to the construction, repair, alteration, addition, restoration and movement of structures, and change of occupancy shall not be mandatory for historic buildings where such buildings are judged by the building official to not constitute a distinct life safety hazard.~~
Repairs, alterations and additions necessary for the preservation, restoration, rehabilitation or continued use of a building or structure may be made without conformance to all the requirements of this code when authorized by the building official, provided:

1. The building or structure has been designated as having special historical or architectural significance by the City Council of this jurisdiction as a landmark or is a contributing structure within a historic district as designated by the City Council of this jurisdiction. The foregoing designations shall be as provided in Article VII of Chapter 33 of the City Code.

2. Any unsafe conditions described in this code are corrected.

3. The restored building or structure will be no more hazardous based on life safety, fire safety, and sanitation than the existing building.

~~**3407.2 Flood hazard areas.** Within flood hazard areas established in accordance with Section 1612.3, where the work proposed constitutes substantial improvement as defined in Section 1612.2, the building shall be brought into conformance with Section 1612.~~

~~**Exception:** Historic buildings that are:~~

~~a. Listed or preliminarily determined to be eligible for listing in the National Register of Historic Places; or~~

~~b. Determined by the Secretary of the U.S. Department of Interior as contributing to the historical significance of a registered historic district or a district preliminarily determined to qualify as an historic district; or~~

~~c. Designated as historic under a state or local historic preservation program that is approved by the Department of Interior.~~

SECTION 3409

DELETE AND RESERVE ENTIRE SECTION

SECTION 3410

BUILDING CONSERVATION

3410.1 Applicable references. For existing buildings, see Appendix L. See also Section 102.6. For a comprehensive code and guidelines on the treatment of existing buildings, see Appendix M.

~~[EB] SECTION 3410~~

~~COMPLIANCE ALTERNATIVES~~

DELETE IN ITS ENTIRETY.

CHAPTER 35*
REFERENCED STANDARDS

This chapter lists the standards that are referenced in various sections of this document. The standards are listed herein by the promulgating agency of the standard, the standard identification, the effective date and title, and the section or sections of this document that reference the standard. The application of the referenced standards shall be as specified in Section 102.4.

NFPA

National Fire Protection Association
1 Batterymarch Park
Quincy, MA 02269-9101

Standard reference number	Title	Referenced in code section number
11–~~98~~ 2002	Low Expansion Foam	904.7
11A–99	Medium- and High-Expansion Foam Systems	904.7
12–00	Carbon Dioxide Extinguishing Systems	904.8, 904.11
12A–~~97~~ 2004	Halon 1301 Fire Extinguishing Systems	904.9
13–~~99~~ 2002	Installation of Sprinkler Systems	507.2, 704.12, 707.2, 903.3.1.1, 903.3.2, 903.3.5.1.1, 904.11, 907.8, 1621.3.10.1, 3104.5, 3104.9
13D–~~99~~ 2002	Installation of Sprinkler Systems in One- and Two-Family Dwellings and Manufactured Homes	903.1.2, 903.3.1.3, 903.3.5.1.1
13R–~~99~~ 2002	Installation of Sprinkler Systems in Residential Occupancies Up to and Including Four Stories in Height	903.1.2, 903.3.1.2, 903.3.5.1.1, 903.3.5.1.2, 903.4
14–00	Installation of Standpipe, Private Hydrants and Hose Systems	905.2, 905.3.4, 905.4.2, 905.8
16–~~99~~ 2003	Installation Foam-Water Sprinkler and Foam Water Spray Systems	904.7, 904.11
17–~~98~~ 2002	Dry Chemical Extinguishing Systems	904.6, 904.11
17A–~~98~~ 2002	Wet Chemical Extinguishing Systems	904.5, 904.11
30–00	Flammable and Combustible Liquids Code	415.3
32–00	Drycleaning Plants	415.7.4
40–97	Storage and Handling of Cellulose Nitrate Motion Picture Film	409.1
61–99	Prevention of Fires and Dust Explosions in Agricultural and Food Product Facilities	415.7.1
72–~~99~~ 2002	National Fire Alarm Code	505.4, 901.6, 903.4.1, 904.3.5, 907.2, 907.2.1, 907.2.1.1, 907.2.10, 907.2.10.4, 907.2.11.2, 907.11.3, 907.2.12.2.3, 907.2.12.3, 907.4, 907.5, 907.9.2, 907.10, 907.14, 907.16, 907.17, 911.1, 3006.5
80–99	Fire Doors and Fire Windows	302.1.1.1, 715.3, 715.4.6.1, 715.4.4, 715.4.7.2, 715.5, 1008.1.3.3
85–01	Boiler and Combustion System Hazards Code (Note: NFPA 8503 has been incorporated into NFPA 85)	415.7.1
101–~~00~~ 2003	Life Safety Code	1024.6.2
110–99	Emergency and Standby Power Systems	2702.1
111–01	Stored Electrical Energy Emergency and Standby Power Systems	2702.1
120–99	Coal Preparation Plants	415.7.1
231C–98	231C HAS BEEN REPLACED BY NFPA 13 ~~Rack Storage of Materials~~	~~507.2~~
252–99	Standard Methods of Fire Tests of Door Assemblies	715.3.1, 715.3.2, 715.3.3, 715.3.4.1
253–00	Test for Critical Radiant Flux of Floor Covering Systems Using a Radiant Heat Energy Source	406.6.4, 804.2, 804.3
257–00	Standard for Fire Test for Window and Glass Block Assemblies	715.3.3, 715.4, 715.4.1, 715.4.2

259–98	Test Method for Potential Heat of Building Materials	2603.4.1.10, 2603.5.3
265–98	Standard Method of Fire Tests for Evaluating Room Fire Growth Contribution of Textile Wall Coverings	803.6.1, 803.6.1.1, 803.6.1.2
268–96	Standard Test Method for Determining Ignitibility of Exterior Wall Assemblies Using a Radiant Heat Energy Source	1406.2.1, 1406.2.1.1, 1406.2.1.2, 2603.5.7
285–98	Standard Method of Test for the Evaluation of Flammability Characteristics of Exterior Non-Load-Bearing Wall Assemblies Containing Combustible Components ~~Using the Intermediate-Scale, Multistory Test Apparatus~~	1407.10.4, 2603.5.5
2846–00	Standard Method of Fire Test for Evaluating Contribution of Wall and Ceiling Interior Finish to Room Fire Growth	402.14.4, 803.2, 803.2.1, 803.5, 2603.4, 2603.8
409–~~95~~ 2001	Standard on Aircraft Hangers	412.2.6, 412.4.5
418–01	Standard for Heliports	412.4.5.6
651–98	Machining and Finishing of Aluminum and the Production and Handling of Aluminum Powders	415.7.1
654–00	Prevention of Fire & Dust Explosions from the Manufacturing, Processing, and Handling of Combustible Particulate Solids	415.7.1
655–93	Prevention of Sulfur Fires and Explosions	415.7.1
664–98	Prevention of Fires Explosions in Wood Processing and Woodworking Facilities	415.7.1
701–99	Standard Methods of Fire Tests for Flame-Propagation of Textiles and Films	802.1, 805.1, 805.2, 3102.3.1, 3105.3
704–96	Standard System for the Identification of the Hazards of Materials for Emergency Response	414.7.2, 415.2
1124–98	Manufacture, Transportation, and Storage of Fireworks and Pyrotechnic Articles	415.3.1
2001–~~00~~ 2004	Clean Agent Fire Extinguishing Systems	904.10

***NOTE: ALL OTHER PORTIONS OF CHAPTER 35 TO REMAIN AS SET FORTH IN THE *2003 INTERNATIONAL BUILDING CODE*.**

CHAPTER 46

HOUSTON SIGN CODE

The Houston Sign Code, which is published as a separate document, constitutes Chapter 46 of this code.

CHAPTER 62

LAKE HOUSTON STRUCTURES

SECTION 6201

PURPOSE

6201.1 General. This chapter prescribes design requirements applicable to bulkheads, piers, jetties and pontoon- or raft-type boats constructed in or on Lake Houston as allowed in Chapter 23 of the City Code.

A separate permit shall be required for each structure. In addition to the building permit, a yearly license must be obtained as required in Chapter 23, Article II, Division 2 of the City Code.

All pier, bulkhead, and jetty sites will be inspected before a permit is issued and after construction is completed and shall be subject to final inspection.

All bulkheads, jetties, piers shall be designed by and bear the seal of a professional engineer licensed by the State of Texas.

6201.2 Existing structures. All floating structures shall be brought into conformance with the requirements of this chapter. All other structures shall be subject to the requirements of Sections 102.6.1 and 115.

6201.3 Definitions. For the purpose of this chapter, certain terms are defined as follows:

BULKHEAD. A retaining wall designed to retard erosion of and prevent the banks of a lake from sloughing off.

COMMERCIAL PIER. One or more piers, any part of which is used for any of the following:

1. Commercial boat livery.
2. Commercial fishing camp.
3. Public pier.
4. Private club.
5. A pier used by the owner(s) of two or more residential lots for access to the lake.
6 A pier at which access to the lake may be provided for the payment of an admission or membership fee.
7. A pier at which vessels are moored for money or other valuable consideration.
8. A pier at which two or more vessels that have a cab, a toilet or a sewage holding tank are moored.

JETTY. A permanent structure built into a body of water to direct the current or protect a harbor.

PIER. Any pier, wharf, boat dock, boat shed, gangway or other platform or structure in or adjoining the water to which vessels may be moored, from which vessels may be boarded or on which persons may walk or sit.

PRIVATE PIER. A pier other than a commercial pier.

SECTION 6202

PIER CONSTRUCTION

6202.1 Pier construction. All piers shall comply with the following:

6202.1.1 Projection. No pier may project more than 30 feet past the point at which a 5-foot depth of water is encountered when the lake is at spillway level. No pier shall project so as to be closer to another property than that from which it projects, at any point on such pier. No pier may project more than one third of the distance across any body of water, inlet, bay, channel, stream or cove. No pier may be located closer than 5 feet to an extended property line. The maximum width of a commercial pier shall not exceed 12 feet, and the maximum width of a private pier shall not exceed 8 feet.

6202.1.2 Superstructures. Piers may be provided with posts, railings and roofs, but shall be without walls of any kind whatsoever. Upper decks shall be limited to 600 square feet in total area. The total area for a superstructure, upper deck and boathouse combined shall not exceed 1300 square feet.

Exception: Enclosed storage that does not exceed 40 square feet may be provided to store fishing and boating equipment.

6202.1.3 Electric power. Electric wiring shall comply with the Electrical Code.

6202.1.4 Lumber. Wood piles and all lumber used in pier construction shall be pressure treated with an approved preservative.

6202.1.5 Warning devices. Amber or yellow reflectors with 3-inch-minimum-diameter lenses shall be placed on all piers and other surface installations placed in the lake. Reflectors shall be placed not more than 8 feet apart and shall be 18 inches above the water when the lake is at spillway elevation or elevation 44 1/2 feet above mean sea level.

6202.1.6 Design requirements. Commercial piers shall be designed for at least 100 pounds per square foot live floor load. Private piers shall be designed for at least 50 pounds per square foot live floor load.

Wave action on piers shall be computed by the following formula: $P=125h^2$ (tan angle), in which the point of application is assumed to be at $3/8h$; P=wave pressure, in pounds per linear foot of wave or per square foot of pier area at $3/8h$; h=height of wave in feet (minimum for h shall be 4 feet); and angle=maximum angle between center line of pier and wave front (minimum angle is 15 degrees).

6202.1.7 Plumbing. Plumbing shall comply with the Plumbing Code.

6202.1.8 Alternative materials. A pier constructed of alternative materials shall meet or exceed minimum structural requirements and shall support or resist a surcharge of dead weight or load against it as outlined in Section 6202.1.6 above.

6202.2 Private piers. In lieu of the design requirements in Section 6202.1.6, private piers may be constructed as follows:

6202.2.1 Piles. The minimum diameter of a pile shall be 4 inches. Piles shall be embedded at least 30 inches in firm soil.

6202.2.2 Column action. All piles shall be braced with diagonal braces with not less than 2-inch by 4-inch lumber, pressure treated, bolted with at least 1/2-inch galvanized bolts. Two bents (set of diagonal braced piles) in any pier shall be connected with X braces.

6202.2.3 Framing. Ledgers shall be at least 2-inch by 6-inch nominal in size and shall be bolted with at least two 1/2-inch galvanized bolts.

6202.2.4 Stringers. Stringers shall be at least 2-inch by 8-inch nominal in size and spaced no more than 3 feet on center.

6202.2.5 Decking. Decking must not be less than 2 feet above 44 1/2 feet elevation. Nominal size planks shall not be less than 2-inch by 6-inch No. 2 grade, spaced not less than 1/4 inch and not more than 1 inch apart, nailed with at least two 16d galvanized nails at each bearing.

SECTION 6203
FLOATING PIERS

6203.1 Floating piers. The provisions of this section shall not apply to canoes, row boats, sail boats and other boats having a single hull. All floating piers, rafts, houseboats and other structures in use on the waters of Lake Houston shall comply with applicable requirements of Section 6202.2 and the following:

6203.1.1 Flotation. Flotation shall be by properly sealed barrels, drums, tanks or pontoons constructed of marine plywood, cypress, redwood, fiberglass, foam plastic or metal. Ferrous metals shall be covered with a marine rust-resistant coating.

6203.1.2 Fasteners. All barrel, drums, tanks or pontoons used as floats shall be secured in place by means of steel straps, bolts, welds or other fasteners of similar strength and permanency. All fasteners, including bolts, nails and screws used in the floats, shall be coated with rust-resistant marine coatings. No strap shall be less than 16 U.S. gauge in the least dimension.

6203.1.3 Steel framing. Steel framing members shall meet the requirements of Chapter 22 of this code. All steel fasteners shall be covered with a marine rust-resistant coating or be galvanized.

6203.1.4 Wood framing. All timber shall be redwood, cypress, or any other wood that has been pressure treated against decay. The least dimension of a beam or girder shall be 4 inches in width, and the depth shall not be less than 8 inches.

6203.1.5 Flooring. Flooring shall be at least 2 inches nominal thickness and shall be cypress, redwood, or any other wood that has been pressure treated against decay.

Exception: Marine or exterior-grade plywood, 3/4 inch minimum, may be used for flooring if it meets the requirements of Chapter 23 of this code.

6203.1.6 Fasteners. All fasteners shall be galvanized or coated with a rust-resistant marine material.

6203.1.7 Superstructures. Rooms, cabins, houses and roofs above the platform level shall meet the requirements of Chapters 22 and 23 of this code.

6203.1.8 Projection. In exception to Section 6202.1.1, floating piers shall not exceed 300 square feet in total area, with a minimum width of 8 feet and a maximum width of 12 feet.

SECTION 6204
BULKHEAD CONSTRUCTION

6204.1 Bulkhead construction. Bulkheads shall be constructed of wood, steel, concrete or aluminum. All wood used in construction of bulkheads shall be pressure treated with an approved preservative.

All private bulkheads shall be constructed on private property. This chapter shall not prohibit the city from constructing or causing to be constructed retaining walls or bulkheads where there is a hazard to life, limb or property or where there is evidence of pollution on the lake.

6204.2 Wood bulkheads. All bulkheads shall be designed by and bear the seal of a professional engineer licensed by the State of Texas and shall comply with the following.

6204.2.1 Piles. The minimum diameter of a pile shall be 5 inch tops. Piles shall be embedded a minimum of 5 feet into firm soil. Piles shall be 1 inch larger in diameter and shall be embedded 1 foot deeper for each 5 feet above ground. Piles shall not be spaced further apart than 6 feet center to center.

6402.2.2 Horizontal members. Horizontal members shall be of at least 3-inch by 8-inch lumber. Two horizontal members are required for piles less than 5 feet above natural ground. Three horizontal members are required for piles over 5 feet above natural ground. Horizontal members shall be attached to the wood piles with not less than 1/2-inch galvanized bolts, washers and nuts, or not less than two 60d common galvanized nails.

6402.2.3 Vertical members. Vertical members shall be of at least 2-inch by 6-inch nominal lumber. All vertical members shall be embedded a minimum of 3 feet into firm soil. Cracks between members shall not exceed 1/8 inch. Vertical members shall be attached to each horizontal member with not less than two 16d common galvanized nails.

6402.2.4 Anchors. Anchors shall be at least 8 inches wide and not less than 4 feet in length and shall be embedded into firm soil a minimum of 30 inches. All piles shall be secured to an anchor. Not more than three piles shall be secured to any one anchor. For corners 90 degrees or less, three piles, from the corner may be secured with cross braces forming angles to the piles. Anchor ties shall be of minimum of 1/2-inch galvanized cable with two galvanized clamps on each end or a minimum size 1/2-inch rod secured to the bulkhead and anchor. Other types of anchors may be used when approved by the building official.

6204.3 Concrete bulkheads. Concrete bulkheads shall comply with the following:

6204.3.1 General. All concrete bulkheads shall be of at least four and one-half sack mix and test a minimum of 2500 lbs./in.^{2} at 28 days. The bulkhead shall be embedded a minimum of 36 inches into firm soil and shall not extend more 30 inches above the grade of the fill behind the bulkhead. The width of the concrete shall be a minimum of 10 inches for the part below grade and at least 6 inches for the part above grade.

6204.3.2 Reinforcing. Reinforcement shall consist of reinforcing steel rods of at least No. 3 size placed every 18 inches vertically, and every 18 inches horizontally. All intersecting steel shall be securely tied or welded to insure position in the foundation.

6204.3.3 Anchors. If anchors are used, they must be of an approved type.

6204.4 Steel sheet pile bulkheads. Steel sheet pile bulkheads shall comply with the following:

6204.4.1 General. Steel shall meet standards of ASTM A 245. All piles shall be of not less than No. 12 gauge. The depth of crimp shall not be less than 1 ½ inches, and the width of the crimp shall not be less than 3 ½ inches. Piles shall not have less than 1 inch crimped interlocks along both vertical sides. Finished pile width shall not be less than 12 inches. Piles shall be embedded not less than 4 feet into firm soil, and shall not extend more than 30 inches above grade. A form-fitting driving head or sheet driver shall be used to prevent pile damage.

6204.4.2 Anchors. If anchors are used, they shall be of an approved type.

6204.5 Alternative materials. A bulkhead constructed of alternative materials shall meet or exceed minimum structural requirements according to accepted engineering practices, and shall support or resist

a surcharge of dead weight or load against it as is necessary for it to retain. The alternative material shall also be non-polluting and non-corrosive.

SECTION 6205
JETTY CONSTRUCTION

6205.1 Jetty construction. Jetties may be built wherever a need is determined by and with the written authorization of the Director of Public Works and Engineering. Jetties must be constructed utilizing one of the approved types of bulkheads listed in Section 6204.

APPENDIX E

DELETE ENTIRE APPENDIX AND REPLACE WITH THE FOLLOWING

EXCAVATION AND GRADING

SECTION E101
PURPOSE

E101.1 General. The purpose of this appendix is to safeguard life, limb, property and the public welfare by regulating grading on private property.

SECTION E102
SCOPE

E102.1 General. This appendix sets forth rules and regulations to control excavation, grading and earthwork construction, including fills and embankments; establishes the administrative procedure for issuance of permits; and provides for approval of plans and inspection of grading construction.

SECTION E103
PERMITS REQUIRED

E103.1 Permits required. Except as specified in Section E103.2 of this section, no person shall do any grading without first having obtained a grading permit from the building official.

E103.2 Exempted work. A grading permit is not required for the following:

1. When approved by the building official, grading in an isolated, self-contained area if there is no danger to private or public property.

2. An excavation below finished grade for basements and footings of a building, retaining wall or other structure authorized by a valid building permit. This shall not exempt any fill made with the material from such excavation or exempt any excavation having an unsupported height greater than 5 feet (1524 mm) after the completion of such structure.

3. Cemetery graves.

4. Refuse disposal sites controlled by other regulations.

5. Excavations for wells, tunnels or utilities.

6. Mining, quarrying, excavating, processing or stockpiling of rock, sand, gravel, aggregate or clay where established and provided for by law, provided such operations do not affect the lateral support or increase the stresses in or pressure upon any adjacent or contiguous property.

7. Exploratory excavations under the direction of soil engineers or engineering geologists.

8. An excavation that: (1) is less than 2 feet (610 mm) in depth, or (2) does not create a cut slope greater than 5 feet (1524 mm) in height and steeper than 1 unit vertical in 1 ½ units horizontal (66.7% slope).
9. A fill less than 1 foot (305 mm) in depth and placed on natural terrain with a slope flatter than 1 unit vertical in 5 units horizontal (20% slope), or less than 3 feet (914 mm) in depth, not intended to support structures, that does not exceed 50 cubic yards (38.3 m³) on any one lot and does not obstruct a drainage course.

Exemption from the permit requirements of this chapter shall not be deemed to grant authorization for any work to be done in any manner in violation of the provisions of this chapter or any other laws or ordinances.

E103.3 State and federal requirements. This Appendix is cumulative of all state and federal laws and regulations, including, but not limited to, Chapter 756 of the Texas Health and Safety Code and regulations issued thereunder and the Occupational Safety and Health Administration standards. No provision of this Appendix nor any permit issued hereunder shall be construed to authorize any work to be performed in a manner inconsistent with state or federal requirements, and it is the responsibility of the permit holder to ensure compliance therewith.

SECTION E104
HAZARDS

E104.1 General. Whenever the building official determines that any existing excavation or embankment or fill on private property has become a hazard to life and limb, or endangers property, or adversely affects the safety, use or stability of a public way or drainage channel, the owner of the property upon which the excavation or fill is located, or other person or agent in control of said property, upon receipt of notice in writing from the building official, shall within the period specified therein repair or eliminate such excavation or embankment so as to eliminate the hazard and be in conformance with the requirements of this code.

SECTION E105
DEFINITIONS

E105.1 General. For the purposes of this appendix, the definitions listed hereunder shall be construed as specified in this section.

APPROVAL. Official acknowledgment that the proposed work or completed work conforms to this chapter in the opinion of the building official.

AS-GRADED. The extent of surface conditions on completion of grading.

BEDROCK. In-place solid rock.

BENCH. A relatively level step excavated into earth material on which fill is to be placed.

BORROW. Earth material acquired from an off-site location for use in grading on a site.

CIVIL ENGINEER. A professional engineer registered in the State of Texas to practice in the field of civil works.

CIVIL ENGINEERING. The application of the knowledge of the forces of nature, principles of mechanics and the properties of materials to the evaluation, design and construction of civil works.

COMPACTION. The densification of a fill by mechanical means.

EARTH MATERIAL. Any rock, natural soil or fill or any combination thereof.

ENGINEERING GEOLOGIST. A geologist experienced and knowledgeable in engineering geology.

ENGINEERING GEOLOGY. The application of geologic knowledge and principles in the investigation and evaluation of naturally occurring rock and soil for use in the design of civil works.

EROSION. The wearing away of the ground surface as a result of the movement of wind, water or ice.

EXCAVATION. The mechanical removal of earth material.

FILL. A deposit of earth material placed by artificial means.

GEOTECHNICAL ENGINEER. See "soils engineer."

GRADE. The vertical location of the ground surface.

Existing Grade. The grade prior to grading

Finish Grade. The final grade of the site that conforms to the approved plan.

Rough Grade. The stage at which the grade approximately conforms to the approved plan.

GRADING. Any excavating or filling or combination thereof.

KEY. designed compacted fill placed in a trench excavated in earth material beneath the toe of a proposed fill slope.

PROFESSIONAL INSPECTION. The inspection required by this code to be performed by the civil engineer, soils engineer or engineering geologist. Such inspections include those performed by persons supervised by such engineers or geologists and shall be sufficient to form an opinion relating to the conduct of the work.

SITE. Any lot or parcel of land or contiguous combination thereof, under the same ownership, where grading is performed or permitted.

SLOPE. An inclined ground surface, the inclination of which is expressed as a ratio of horizontal distance to vertical distance.

SOIL. Naturally occurring superficial deposits overlying bedrock.

SOILS ENGINEER (GEOTECHNICAL ENGINEER). An engineer experienced and knowledgeable in the practice of soils engineering (geotechnical engineering).

SOILS ENGINEERING (GEOTECHNICAL ENGINEERING). The application of the principles of soils mechanics in the investigation, evaluation and design of civil works involving the use of earth materials and the inspection or testing of the construction thereof.

TERRACE. A relatively level step constructed in the face of graded slope surface for drainage and maintenance purposes.

SECTION E106
GRADING PERMIT REQUIREMENTS

E106.1 Permits required. Except as exempted in Section E103, no person shall do any grading without first obtaining a grading permit from the building official. A separate permit shall be obtained for each site, and a single permit may cover both excavations and fills on one site.

E106.2 Application. The provisions of Section 105.3 are applicable to grading. Additionally, the application shall state the estimated quantities of work involved.

E106.3 Grading designation. Grading in excess of 5,000 cubic yards (3825 m^3) shall be performed in accordance with the approved grading plan prepared by a civil engineer and shall be designated as "engineered grading." Grading involving less than 5,000 cubic yards (3825 m^3) shall be designated "regular grading" unless the permittee chooses to have the grading performed as engineered grading or the building official determines that special conditions or unusual hazards exist, in which case grading shall conform to the requirements for engineered grading.

E106.4 Engineered grading requirements. Application for a grading permit shall be accompanied by two sets of plans and specifications, as well as supporting data consisting of a soils engineering report and engineering geology report. The plans and specifications shall be prepared and signed by an individual licensed by the State of Texas to prepare such plans or specifications when required by the building official.

Specifications shall contain information covering construction and material requirements.

Plans shall be drawn to scale upon substantial paper or cloth and shall be of sufficient clarity to indicate the nature and extent of the work proposed and show in detail that they will conform to the provisions of this code and all relevant laws, ordinances, rules and regulations. The first sheet of each set of plans shall display the location of the work, the name and address of the owner, and the name of the person by whom they were prepared.

The plans shall include the following information:

1. General vicinity of the proposed site.

2. Property limits and accurate contours of existing ground and details of terrain and area drainage.

3. Limiting dimensions, elevations or finish contours to be achieved by the grading, and proposed drainage channels and related construction.

4. Detailed plans of all surface and subsurface drainage devices, walls, cribbing, dams and other protective devices to be constructed with, or as a part of, the proposed work, together with a map showing the drainage area and the estimated runoff of the area served by any drains.

5. Location of any buildings or structures on the site upon which the work is to be performed and the location of any buildings or structures or property adjacent to the site that are within 15 feet (4572 mm) of the property or that may be affected by the proposed grading operations.

6. The dates of the soils engineering and engineering geology reports together with the names, addresses and phone numbers of the firms or individuals who prepared the reports.

7. Recommendations included in the soils engineering report and the engineering geology report shall be incorporated in the grading plans or specifications. When approved by the building official, specific recommendations contained in the soils engineering report and the engineering geology report that are applicable to grading may be included by reference.

E106.5 Soils engineering report. The soils engineering report required by Section E106.4 shall include data regarding the nature, distribution and strength of existing soils, conclusions and recommendations for grading procedures and design criteria for corrective measures, including buttress fills, when necessary, and opinion on adequacy for the intended use of sites to be developed by the proposed grading as affected by soils engineering factors, including the stability of slopes.

E106.6 Engineering geology report. The engineering geology report required by Section E106.4 shall include an adequate description of the geology of the site, conclusions and recommendations regarding the effect of geologic conditions on the proposed development, and opinion on the adequacy for the intended use of sites to be developed by the proposed grading, as affected by geologic factors.

E106.7 Liquefaction study. The building official may require a geotechnical investigation in accordance with Section 1802.4 when, during the course of an investigation, all of the following conditions are discovered:

1. Shallow ground water, 50 feet (15 240 mm) or less.

2. Unconsolidated sandy alluvium.

3. Seismic Zones C and D.

The report of the investigation shall address the potential for liquefaction.

E106.8 Regular grading requirements. Each application for a grading permit shall be accompanied by a plan in sufficient clarity to indicate the nature and extent of the work. The plans shall give the location of the work, the name of the owner and the name of the person who prepared the plan. The plan shall include the following information:

1. General vicinity of the proposed site.

.

2. Limiting dimensions and depth of cut and fill.

3. Location of any buildings or structures on the site upon which the work is to be performed, and the location of any buildings or structures within 15 feet (4572 mm) of the proposed grading.

E106.9 Issuance. The provisions of Section 105.3 are applicable to grading permits. The building official may require that grading operations and project designs be modified if delays occur which incur weather-generated problems not considered at the time the permit was issued.

The building official may require professional inspection and testing by a soils engineer. When the building official has cause to believe that geologic factors may be involved, the grading will be required to conform to the requirements for engineered grading.

SECTION E107
GRADING FEES

E107.1 General. Fees shall be assessed in accordance with the provisions of this section or shall be as set forth in the fee schedule adopted by the jurisdiction.

E107.2 Grading permit fees. A fee for each grading permit shall be paid to the building official as set forth in Section 117.2.1. Separate permits and fees shall apply to retaining walls or major drainage structures as required elsewhere in this code. There shall be no separate charge for standard terrace drains and similar facilities.

SECTION E108
BONDS

E108.1 Bond required. The building official may require bonds in such form and amounts as may be deemed necessary to ensure that the work, if not completed in accordance with the approved plans and specifications, will be corrected to eliminate hazardous conditions.

In lieu of a surety bond, the applicant may file a cash bond or instrument of credit with the building official in an amount equal to that which would be required in the surety bond.

SECTION E109
CUTS

E109.1 General. Unless otherwise recommended in the approved soils engineering or engineering geology report, cuts shall conform to the provisions of this section.

In the absence of an approved soils engineering report, these provisions may be waived for minor cuts not intended to support structures.

E109.2 Slope. The slope of cut surfaces shall be no steeper than is safe for the intended use and shall be no steeper than 1 unit vertical in 2 units horizontal (50% slope) unless the permittee furnishes a soils engineering or an engineering geology report, or both, stating that the site has been investigated and giving an opinion that a cut at a steeper slope will be stable and not create a hazard to public or private property.

SECTION E110
FILLS

E110.1 General. Unless otherwise recommended in the approved soils engineering report, fills shall conform to the provisions of this section.

In the absence of an approved soils engineering report, these provisions may be waived for minor fills not intended to support structures.

E110.2 Preparation of ground. Fill slopes shall not be constructed on natural slopes steeper than 1 unit vertical in 2 units horizontal (50% slope). The ground surface shall be prepared to receive fill by removing vegetation, noncomplying fill, topsoil and other unsuitable materials, scarifying to provide a bond with the new fill and, where slopes are steeper than 1 unit vertical in 5 units horizontal (20% slope) and the height is greater than 5 feet (1524 mm), by benching into sound bedrock or other competent material as determined by the soils engineer. The bench under the toe of a fill on a slope steeper than 1 unit vertical in 5 units horizontal (20% slope) shall be at least 10 feet (3048 mm) wide. The area beyond the toe of fill shall be sloped for sheet overflow, or a paved drain shall be provided. When fill is to be placed over a cut, the bench under the toe of fill shall be at least 10 feet (3048 mm) wide, but the cut shall be made before acceptance by the soils engineer or engineering geologist, or both, as a suitable foundation for fill and placement of the fill.

E110.3 Fill material. Detrimental amounts of organic material shall not be permitted in fills. Except as permitted by the building official, no rock or similar irreducible material with a maximum dimension greater than 12 inches (305 mm) shall be buried or placed in fills.

Exception: The building official may permit placement of larger rock when the soils engineer properly devises a method of placement and continuously inspects its placement and approves the fill stability. The following conditions shall also apply:

1. Prior to issuance of the grading permit, potential rock disposal areas shall be delineated on the grading plan.

2. Rocks of a size greater than 12 inches (305 mm) in maximum dimension shall be placed 10 feet (3048 mm) or more below grade, measured vertically.

3. Rocks shall be placed so as to assure filling of all voids with well-graded soil.

E110.4 Compaction. All fills shall be compacted to a minimum of 90 percent of maximum density.

E110.5 Slope. The slope of fill surfaces shall be no steeper than is safe for the intended use. Fill slopes shall be no steeper than 1 unit vertical in 2 units horizontal (50% slope).

SECTION E111
SETBACKS

E111.1 General. Cut and fill slopes shall be set back from site boundaries in accordance with this section. Setback dimensions shall be horizontal distances measured perpendicular to the site boundary. Setback dimensions shall be as shown in Figure E111.1

E111.2 Top of cut slope. The top of cut slopes shall not be made nearer to a site boundary line than one fifth of the vertical height of cut with a minimum of 2 feet (610 mm) and a maximum of 10 feet (3048 mm). The setback may need to be increased for any required interceptor drains.

E111.3 Toe of fill slope. The toe of fill slope shall be made not nearer to the site boundary line than one half the height of the slope with a minimum of 2 feet (610 mm) and a maximum of 20 feet (6096 mm). Where a fill slope is to be located near the site boundary and the adjacent off-site property is developed, special precautions shall be incorporated in the work as the building official deems necessary to protect the adjoining property from damage as a result of such grading. These precautions may include, but are not limited to:

1. Additional setbacks.
2. Provision for retaining or slough walls.
3. Mechanical or chemical treatment of the fill slope surface to minimize erosion.
4. Provisions for the control of surface waters.

E111.4 Modification of slope location. The building official may approve alternate setbacks. The building official may require an investigation and recommendation by a qualified engineer or engineering geologist to demonstrate that the intent of this section has been satisfied.

SECTION E112
DRAINAGE AND TERRACING

E112.1 General. Unless otherwise indicated on the approved grading plan, drainage facilities and terracing shall conform to the provisions of this section for cut or fill slopes steeper than 1 unit vertical in 3 units horizontal (33.3% slope).

E112.2 Terrace. Terraces at least 6 feet (1829 mm) in width shall be established at not more than 30-foot (9144 mm) vertical intervals on all cut or fill slopes to control surface drainage and debris, except that where only one terrace is required, it shall be at midheight. For cut or fill slopes greater than 60 feet (18 288 mm) and up to 120 feet (36 576 mm) in vertical height, one terrace at approximately midheight shall be 12 feet (3658 mm) in width. Terrace widths and spacing for cut and fill slopes greater than 120 feet (36 576 mm) in height shall be designed by a civil engineer and approved by the building official. Suitable access shall be provided to permit proper cleaning and maintenance.

Swales or ditches on terraces shall have a minimum gradient of 5 percent and must be paved with reinforced concrete not less than 3 inches (76 mm) in thickness or an approved equal paving. They shall have a minimum depth at the deepest point of 1 foot (305 mm) and a minimum paved width of 5 feet (1524 mm).

A single run of swale or ditch shall not collect runoff from a tributary area exceeding 13,500 square feet (1254.2 m²) (projected) without discharging into a down drain.

E112.3 Subsurface drainage. Cut and fill slopes shall be provided with subsurface drainage as necessary for stability.

E112.4 Disposal. All drainage facilities shall be designed to carry waters to the nearest practicable drainage way approved by the building official or other appropriate jurisdiction as a safe place to deposit such waters. Erosion of ground in the area of discharge shall be prevented by installation of nonerosive downdrains or other devices.

Building pads shall have a drainage gradient of 2 percent toward approved drainage facilities, unless waived by the building official.

Exception: The gradient from the building pad may be 1 percent if all of the following conditions exist throughout the permit area:

1. No proposed fills are greater than 10 feet (3048 mm) in maximum depth.
2. No proposed finish cut or fill slope faces have a vertical height in excess of 10 feet (3048 mm).
3. No existing slope faces steeper than 1 unit vertical in 10 units horizontal (10% slope) have a vertical height in excess of 10 feet (3048 mm).

E112.5 Interceptor drains. Paved interceptor drains shall be installed along the top of all cut slopes where the tributary drainage area above slopes toward the cut and has a drainage path greater than 40 feet (12 192 mm) measured horizontally. Interceptor drains shall be paved with a minimum of 3 inches (76 mm) of concrete or gunite and reinforced. They shall have a minimum depth of 12 inches (305 mm) and a minimum paved width of 30 inches (762 mm) measured horizontally across the drain. The slope of drain shall be approved by the building official.

SECTION E113
EROSION CONTROL

E113.1 Slopes. The faces of cut and fill slopes shall be prepared and maintained to control against erosion. This control may consist of effective planting. The protection for the slopes shall be installed as soon as practicable and prior to calling for final approval. Where cut slopes are not subject to erosion due to the erosion-resistant character of the materials, such protection may be omitted.

E113.2 Other devices. Where necessary, check dams, cribbing, riprap or other devices or methods shall be employed to control erosion and provide safety.

SECTION E114
GRADING INSPECTION

E114.1 General. Grading operations for which a permit is required shall be subject to inspection by the building official. Professional inspection of grading operations shall be provided by the civil engineer, soils engineer and the engineering geologist retained to provide such services in accordance with Section E114.5 for engineered grading and as required by the building official for regular grading.

E114.2 Civil engineer. The civil engineer shall provide professional inspection within such engineer's area of technical specialty, which shall consist of observation and review as to the establishment of line,

grade and surface drainage of the development area. If revised plans are required during the course of the work they shall be prepared by the civil engineer.

E114.3 Soils engineer. The soils engineer shall provide professional inspection within such engineer's area of technical specialty, which shall include observation during grading and testing for required compaction. The soils engineer shall provide sufficient observation during the preparation of the natural ground and placement and compaction of the fill to verify that such work is being performed in accordance with the conditions of the approved plan and the appropriate requirements of this chapter. Revised recommendations relating to conditions differing from the approved soils engineering and engineering geology reports shall be submitted to the permittee, the building official and the civil engineer.

E114.4 Engineering geologist. The engineering geologist shall provide professional inspection within such engineer's area of technical specialty, which shall include professional inspection of the bedrock excavation to determine if conditions encountered are in conformance with the approved report. Revised recommendations relating to conditions differing from the approved engineering geology report shall be submitted to the soils engineer.

E114.5 Permittee. The permittee shall be responsible for the work to be performed in accordance with the approved plans and specifications and in conformance with the provisions of this code, and the permittee shall engage consultants, if required, to provide professional inspections on a timely basis. The permittee shall act as a coordinator between the consultants, the contractor and the building official. In the event of changed conditions, the permittee shall be responsible for informing the building official of such change and shall provide revised plans for approval.

E114.6 Building official. The building official shall inspect the project at the various stages of work requiring approval to determine that adequate control is being exercised by the professional consultants.

E114.7 Notification of noncompliance. If, in the course of fulfilling their respective duties under this chapter, the civil engineer, the soils engineer or the engineering geologist finds that the work is not being done in conformance with this chapter or the approved grading plans, the discrepancies shall be reported immediately in writing to the permittee and to the building official.

E114.8 Transfer of responsibility. If the civil engineer, the soils engineer, or the engineering geologist of record is changed during grading, the work shall be stopped until the replacement has agreed in writing to accept their responsibility within the area of technical competence for approval upon completion of the work. It shall be the duty of the permittee to notify the building official in writing of such change prior to the recommencement of such grading.

SECTION E115
COMPLETION OF WORK

E115.1 Final reports. Upon completion of the rough grading work and at the final completion of the work, the following reports and drawings and supplements thereto are required for engineered grading or when professional inspection is performed for regular grading, as applicable.

1. An as-built grading plan prepared by the civil engineer retained to provide such services in accordance with Section E114.5 showing original ground surface elevations, as-graded ground surface elevations, lot drainage patterns, and the locations and elevations of surface drainage facilities and of the outlets of subsurface drains. As-constructed locations, elevations and details of subsurface drains shall be shown as reported by the soils engineer. Civil engineers shall state

that to the best of their knowledge the work within their area of responsibility was done in accordance with the final approved grading plan.

2. A report prepared by the soils engineer retained to provide such services in accordance with Section E114.5, including locations and elevations of field density tests, summaries of field and laboratory tests, other substantiating data, and comments on any changes made during grading and their effect on the recommendations made in the approved soils engineering investigation report.

   Soils engineers shall submit a statement that, to the best of their knowledge, the work within their area of responsibilities is in accordance with the approved soils engineering report and applicable provisions of this chapter.

3. A report prepared by the engineering geologist retained to provide such services in accordance with Section E114.5, including a final description of the geology of the site and any new information disclosed during the grading and the effect of same on recommendations incorporated in the approved grading plan. Engineering geologists shall submit a statement that, to the best of their knowledge, the work within their area of responsibility is in accordance with the approved engineering geologist report and applicable provisions of this chapter.

E115.2 Notification of Completion. The permittee shall notify the building official when the grading operation is ready for final inspection. Final approval shall not be given until all work, including installation of all drainage facilities and their protective devices, and all erosion-control measures have been completed in accordance with the final approved grading plan, and the required reports have been submitted.

Figure E111.1 – Setback Dimensions

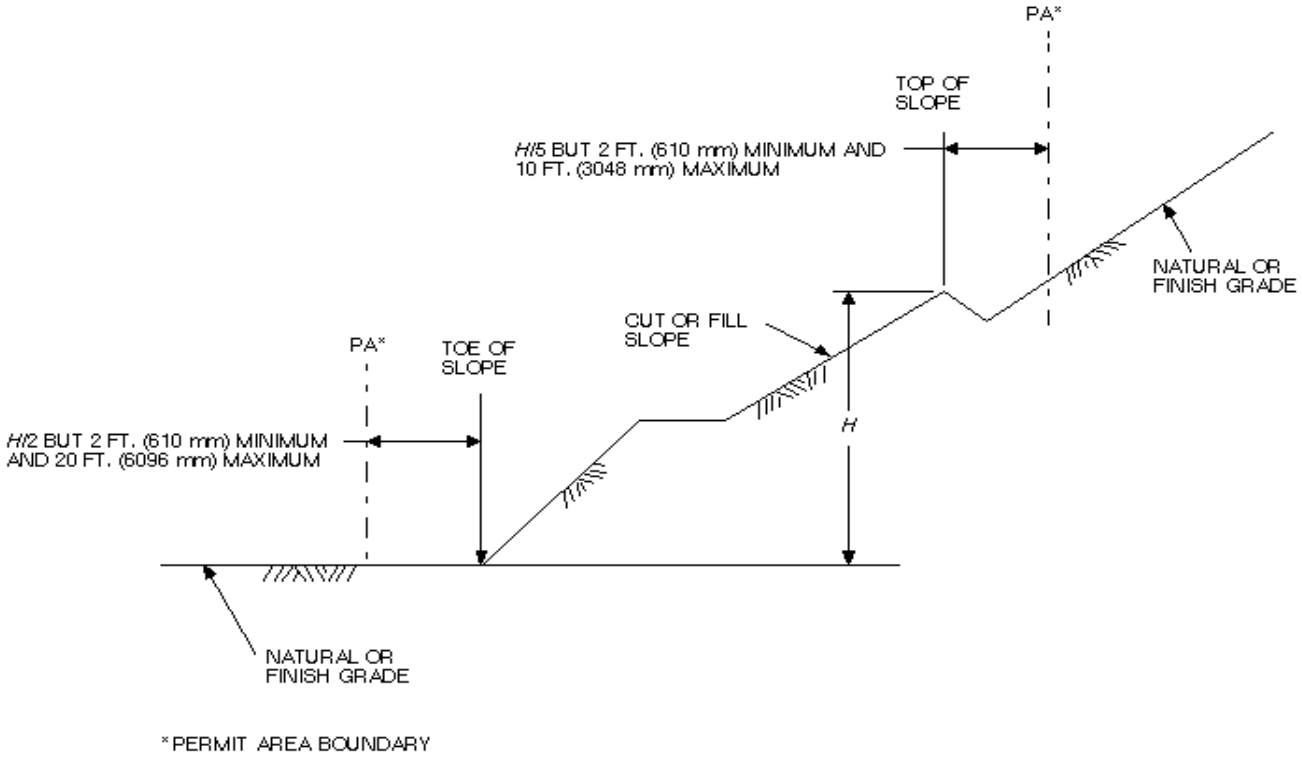

APPENDIX K
CONVENTIONAL LIGHT-FRAME WOOD CONSTRUCTION FOR HIGH-WIND AREAS

SECTION K101
GENERAL

K101.1 Scope. This chapter applies to regular-shaped buildings that are not more than three stories in height and are of conventional light-frame construction.

Exception: Detached carports and garages not exceeding 700 square feet (65 m²) and accessory to Group R-3 Occupancies need only comply with the roof-member-to-wall-tie requirements of Section K103.8.

SECTION K102
DEFINITION

CORROSION RESISTANT or NONCORROSIVE. Refers to a material having a corrosion resistance equal to or greater than a hot-dipped galvanized coating of 1.5 ounces of zinc per square foot (4 g/m²) of surface area. When an element is required to be corrosion resistant or noncorrosive, all of its parts, such as screws, nails, wire, dowels, bolts, nuts, washers, shims, anchors, ties and attachments, shall also be corrosion resistant or noncorrosive.

SECTION K103
COMPLETE LOAD PATH AND UPLIFT TIES

K103.1 General. Blocking, bridging, straps, approved framing anchors or mechanical fasteners shall be installed to provide continuous ties from the roof to the foundation system. Tie straps shall be 1⅛-inch (28.6 mm) by 0.036-inch (0.91 mm) (No. 20 gage) sheet steel and shall be corrosion resistant as herein specified. All metal connectors and fasteners used in exposed locations or in areas otherwise subject to corrosion shall be of corrosion-resistant or noncorrosive material. The number of common nails specified is the total required and shall be equally divided on each side of the connection. Nails shall be spaced to avoid splitting of the wood.

Exception: Pre-manufactured connectors that provide equal or greater tie-down capacity may be used provided that they are installed in compliance with all the manufacturer's specifications.

K103.2 Wall-to-foundation tie. Exterior walls shall be tied to a continuous foundation system, or an elevated foundation system in accordance with Section K105.

K103.3 Sills and foundation tie. Foundation plates resting on concrete or masonry foundations shall be bolted to the foundation with not less than 1/2-inch-diameter (13 mm) anchor bolts with 7-inch-minimum (178 mm) embedment into the foundation and spaced not more than 6 feet (1829 mm) on center.

K103.4 Floor-to-foundation tie. The lowest-level exterior wall studs shall be connected to the foundation sill plate or an approved elevated foundation system with bent tie straps spaced not more than 48 inches (1219 mm) on center. Tie straps shall be nailed with a minimum of 4 ten penny nails.

K103.5 Wall framing details. The spacing of studs in exterior walls shall be in accordance with Chapter 23. Mechanical fasteners complying with this chapter shall be installed at a maximum of 48 inches (1219 mm) on center as required to connect studs to the sole plates, foundation sill plate and top plates of the wall. The fasteners shall be nailed with a minimum of 8 eight penny nails.

Where openings exceed 4 feet (1219 mm) in width, the required tie straps shall be at each edge of the opening and connected to a doubled full-height wall stud. When openings exceed 12 feet (3658 mm) in width, two ties at each connection or a manufactured fastener designed to prevent uplift shall be provided.

K103.6 Wall sheathing. All exterior walls and required interior main cross-stud partitions shall be sheathed in accordance with Chapter 23.

K103.7 Floor-to-floor tie. Upper-level exterior wall studs shall be aligned and connected to the wall studs below with tie straps placed a minimum of 4 feet (1219 mm) on center and connected with a minimum of 6 eight penny nails per strap.

K103.8 Roof-members-to-wall tie. Tie straps shall be provided from the side of the roof-framing member to the supporting member below the roof. Tie straps shall be placed no further apart than every other roof-framing member and connected with a minimum of 8 eight penny nails.

K103.9 Ridge ties. Opposing common rafters shall be aligned at the ridge and be connected at the rafters with tie straps spaced a maximum of 4 feet (1219 mm) on center and connected with 8 eight penny nails.

K103.10 Gable-end walls. Gable-end wall studs shall be continuous between points of lateral support that are perpendicular to the plane of the wall. Gable-end wall studs shall be attached with approved mechanical fasteners at the top and bottom. Eight 8 penny nails shall be required for each fastener. Fasteners shall be spaced a maximum of 4 feet (1219 mm) on center.

SECTION K104
ROOFS

K104.1 Roof sheathing. Solid roof sheathing shall be applied and shall consist of a minimum 1-inch-thick (25.4 mm) nominal lumber applied diagonally or a minimum 15/32-inch-thick (11.9 mm) wood structural panel or particle board (OSB) or other approved sheathing applied with the long dimension perpendicular to supporting rafters. Sheathing shall be nailed to roof framing in an approved manner. The end joints of

wood structural panels or particle board shall be staggered and shall occur over blocking, rafters or other supports.

K104.2 Roof covering. Roof coverings shall be approved and shall be installed and fastened in accordance with Chapter 15 and with the manufacturer's instructions.

K104.3 Roof overhang. The roof eave overhang shall not exceed 3 feet (914 mm) unless an analysis is provided showing that the required resistance is provided to prevent uplift.

The roof overhang at gabled ends shall not exceed 2 feet (610 mm) unless an analysis showing that the required resistance to prevent uplift is provided.

SECTION K105
ELEVATED FOUNDATION

K105.1 General. When approved, elevated foundations supporting not more than one story and meeting the provisions of this section may be used. A foundation investigation may be required by the building official.

K105.2 Material. All exposed wood-framing members shall be treated wood. All metal connectors and fasteners used in exposed locations shall be corrosion-resistant or noncorrosive steel.

K105.3 Wood piles. The spacing of wood piles shall not exceed 8 feet (2438 mm) on center. Square piles shall not be less than 10 inches (254 mm) and tapered piles shall have a tip of not less than 8 inches (203 mm). Eight-inch-square (51613 mm²) piles shall have a minimum embedment length of 5 feet (1524 mm) and shall project not more than 8 feet (2438 mm) above undisturbed ground surface. Eight-inch (203 mm) taper piles shall have a minimum embedment length of 6 feet (1828 mm) and shall project not more than 7 feet (2134 mm) above undisturbed ground surface.

K105.4 Girders. Floor girders shall be solid sawn timber, built-up 2-inch-thick (51 mm) lumber or trusses. Splices shall occur over wood piles. The floor girders shall span in the direction parallel to the potential floodwater and wave action.

K105.5 Connections. Wood piles may be notched to provide a shelf for supporting the floor girders. The total notching shall not exceed 50 percent of the pile cross section. Approved bolted connections with 1/4-inch (6.4 mm) corrosion-resistant or noncorrosive steel plates and 3/4-inch-diameter (19 mm) bolts shall be provided. Each end of the girder shall be connected to the piles using a minimum of two 3/4-inch-diameter (19 mm) bolts.

APPENDIX L
LIFE SAFETY REQUIREMENTS FOR EXISTING BUILDINGS

SECTION L101
GENERAL

L101.1 Purpose. The purpose of this appendix chapter is to provide a reasonable degree of safety to persons occupying existing buildings by providing for alterations to such existing buildings that do not conform with the minimum requirements of this code. This appendix chapter shall apply to and the term "existing building" shall be construed to mean any building existing within the corporate limits of the city on January 1, 1986, and any building annexed into the corporate limits after that date.

Exception: Group U, R-3 Occupancies, and Group B, F, M, and S-1 or S-2 Occupancies (other than motor vehicle repair garages) that are single-story buildings without basements.

L101.2 Compliance program. The owners of existing buildings shall apply for inspection by December 31, 1991, or one year from the date of annexation of the building into the jurisdiction, whichever is later. The building official shall determine the relative hazard category of each application and shall schedule inspections starting with the highest hazard category.

In situations where the jurisdiction or any other regulatory authority requires a valid certificate of occupancy prior to licensing a use and no certificate of occupancy was issued at the time of construction, a Life Safety Compliance Certificate shall satisfy the requirements for an existing building. Inspections that are required for permitting or licensing shall be given priority over other inspections provided that the applicant advises the building official of the need. An application for inspection under this appendix chapter shall be regarded as an application for a certificate of occupancy for purpose of Section 10-3.1 of the City Code, and each application must be accompanied by the affidavit specified therein.

Hazard categories (from highest to lowest group)

:

1. Group A, Divisions 1 and 2; Group E; Group I; Group H, Divisions 1 and 2.
2. Group A, Divisions 3, 4, and 5
3. Group R, Divisions 1 and 2; Group B, dining and drinking establishments; Group H other than Divisions 1 and 2.
4. Group B other than dining and drinking establishments and Groups F, M, and S.

The building official shall notify the building owner or the owner's agent of the scheduled inspections at least 30 days in advance. Within 15 days following notification of the inspection date, the owner or agent shall pay the applicable fees established in Section 117.2.3. Following the inspection, the building official shall issue a Life Safety Compliance Certificate if there are no deficiencies. Where deficiencies are found, the owner or agent shall be advised in writing of the nature of the observed deficiencies that require correction. Such written notice shall not be construed to excuse compliance with any defects that may not have been observed or noted by the inspectors, and it shall be the duty of the owner to determine and

correct all violations of this appendix chapter. It shall be the duty of the owner or agent to bring the building into full compliance with this appendix chapter within two years from the date that notice is given of deficiencies of inspection except to the extent that an extension of time has been granted as provided in Section L109 of this appendix chapter.

Upon completion of compliance work, the building official shall conduct a final inspection and, upon determining that all requirements have been met, shall issue a Life Safety Compliance Certificate.

L101.3 Unsafe or hazardous conditions. Any condition in a building or building system, including, but not limited to, electrical, mechanical and plumbing systems, that is found to be unsafe, unsanitary or hazardous during a life safety compliance inspection shall be corrected as a part of the owner's compliance plan.

L101.4 Alternate materials and methods. Alternate materials and methods may be used, provided such materials or methods are found by the building official to be, for the purpose intended, at least the equivalent of that prescribed in this chapter in suitability, strength, effectiveness, fire resistance, durability and safety. The building official may permit alternates in conformance with Section 104.11 of this code.

L101.5 Dangerous buildings. The provisions of this appendix chapter shall not be construed to authorize the maintenance, use or keeping of any building in such condition that it constitutes a dangerous building under Article IX of Chapter 10 of the City Code or to excuse or extend the time given for compliance with any order issued thereunder by the hearing officer.

SECTION L102
EXITS

L102.1 Number of means of egress. Every floor above the first story used for human occupancy shall have at least two separate means of egress, one of which may be an exterior fire escape complying with Section L102.4. Subject to the approval of the official, an approved exit ladder device may be used in lieu of a fire escape when the construction feature or location of the building on the property makes the installation of a fire escape impracticable.

Exception: In all occupancies, second stories with an occupant load of 10 or less may have one means of egress.

An exit ladder device when used in lieu of a fire escape shall conform with UBC Standard 10-3. The use of an exit ladder device shall be permitted under the following conditions:

1. The device shall serve an occupant load of than 10 or fewer, or a single dwelling or guest room.

2. The building does not exceed three stories in height.

3. Access to the device is adjacent to an opening as specified for emergency egress or rescue from a balcony.

4. The device, when operated, shall not pass in front of any building opening below the unit being served.

5. The means of activating the device for the ladder is accessible only from the opening or balcony served.

6. The device shall be installed so that it will not cause a person using it to be within 6 feet (1829 mm) of exposed electrical wiring.

L102.2 Stair construction. All required stairs shall have a minimum run of 9 inches (229 mm) and a maximum rise of 8 inches (203 mm) and shall have a minimum width of 30 inches (762 mm) exclusive of handrails. Every stairway shall have at least one handrail. A landing having a minimum 30-inch (762 mm) run in the direction of travel shall be provided at each point of access to the stairway.

Exception: Fire escapes as provided for in this section.

Exterior stairs shall be of noncombustible construction.

Exception: On buildings of Types III, IV and V construction, provided the exterior stairs are constructed of wood of not less than 2-inch (51 mm) nominal thickness.

L102.3 Corridors. Corridors serving as an exit for an occupant load of 30 or more shall have walls and ceilings of not less than one-hour fire-resistive construction as required by this code. Existing walls surfaced with wood lath and plaster in good condition or ½-inch (12.7 mm) gypsum wallboard or openings with fixed wired glass set in metal frames are permitted for corridor walls and ceilings and occupancy separations when approved. Doors opening into such corridors shall be protected by 20-minute fire assemblies or solid wood doors not less than 1¾ inches (45 mm) thick. Where the existing frame will not accommodate a 1¾-inch-thick (45 mm) door, a 1⅜-inch-thick (35 mm) solid bonded wood-core door or equivalent insulated steel door shall be permitted. Except for Group I Occupancy patient rooms, treatment rooms and emergency rooms, doors shall be self-closing or automatic closing by smoke detection. Transoms and openings other than doors from corridors to rooms shall comply with Section 714 or be covered with a minimum of ½-inch (12.7 mm) gypsum wallboard or equivalent material on the room side.

Exception: Existing corridor walls, ceilings and opening protection not in compliance with the above may be continued when such buildings are protected with an approved automatic sprinkler system throughout the floor or when such existing corridors are at least 10 feet or more in width.

L102.4 Fire escapes.

L102.4.1. Use as required exit. Existing fire escapes that, in the opinion of the building official, comply with the intent of this section may be used as one of the required exits. The location and anchorage of fire escapes shall be of approved design and construction.

L102.4.2. General requirements. Fires escapes shall comply with the following:

1. Access from a corridor shall not be through an intervening room.

2. All openings within 10 feet (3048 mm) shall be protected by three-fourths hour fire assemblies. When located within a recess or vestibule, adjacent enclosure walls shall be of not less than one-hour fire-resistive construction.

3. Egress from the building shall be by a clear opening having a minimum dimension of not less than 29 inches (737 mm). Such openings shall be openable from the inside without the use of a key or special knowledge or effort. The sill of an opening giving access shall not be more than 30 inches (762 mm) above the floor of the building or balcony.

4. Fire escape stairways and balconies shall support the dead load plus a live load of not less than 100 pounds per square foot (4.79 kN/m²) and shall be provided with a top and intermediate handrail on each side. The pitch of the stairway shall not exceed 60 degrees with a minimum width of 18 inches (457 mm). Treads shall be not less than 4 inches (102 mm) in width and the rise between treads shall not exceed 10 inches (254 mm). All stair and balcony railings shall support a horizontal force of not less than 50 pounds per lineal foot (729.5 N/m) of railing.

5. Balconies shall be not less than 44 inches (1118 mm) in width with no floor opening other than the stairway opening, greater than 5/8 inch (16 mm) in width. Stairway openings in such balconies shall be not less than 22 inches by 44 inches (599 mm by 1118 mm). The balustrade of each balcony shall be not less than 36 inches (914 mm) high with not more than 9 inches (229 mm) between balusters.

6. Fire escapes shall extend to the roof or provide an approved gooseneck ladder between the top floor landing and the roof when serving buildings four or more stories in height having roofs with a slope of less than 4 units vertical in 12 units horizontal (33.3 % slope). Fire escape ladders shall be designed and connected to the building to withstand a horizontal force of 100 pounds per lineal foot (1459 N/m); each rung shall support a concentrated load of 500 pounds (2224 N) placed anywhere on the rung. All ladders shall be at least 15 inches (381 mm) wide, located within 12 inches (305 mm) of the building and shall be placed flatwise relative to the face of the building. Ladder rungs shall be 3/4 inch (19 mm) in diameter and shall be located 12 inches (305 mm) on center. Openings for roof access ladders through cornices and similar projections shall have minimum dimensions of 30 inches by 33 inches (762 mm by 838 mm).

7. The lowest balcony shall be not more than 18 feet (5486 mm) from the ground. Fire escapes shall extend to the ground or be provided with counterbalanced stairs reaching to the ground.

8. Fire escapes shall not take the place of stairways required by the codes under which the building was constructed.

9. Fire escapes shall be kept clear and unobstructed at all times and maintained in good working order.

L102.5 Exit and fire escape signs. Exit signs shall be provided as required by this code.

Exception: The use of existing exit signs may be continued when found by the building official to provide adequate direction to the exits in emergency situations.

All doors or windows providing access to a fire escape shall be provided with fire escape signs.

L102.6 Exit illumination. Exits shall be illuminated as required by Section 1003.2.11 of this code.

SECTION L103
ENCLOSURE OF VERTICAL SHAFTS

L103.1 Enclosure of vertical shafts. Interior vertical shafts, including but not limited to stairways, elevator hoistways, and service and utility shafts, shall be enclosed by a minimum one-hour fire-resistive construction. All openings into such shafts shall be protected with one-hour fire assemblies that shall be maintained self-closing or be automatic closing by smoke detection. All other openings shall be fire protected in an approved manner. Existing fusible link-type automatic door closing devices may be permitted if the fusible link rating does not exceed 135°F (57.2°C).

Exceptions:

1. In other than Group I Occupancies, an enclosure will not be required for openings serving only one adjacent floor.

2. Stairways need not be enclosed in a continuous vertical shaft if each story is separated from other stories by one-hour fire resistive construction or approved wired-glass set in steel frames. In addition, all exit corridors shall be sprinklered, and each opening between the corridor and any occupant space shall have at least one sprinkler head above the opening on the tenant side. The sprinkler system may be supplied from the domestic water supply if of adequate volume and pressure.

3. Vertical openings need not be protected if the building is protected by an approved automatic sprinkler system.

SECTION L104
BUILDING ACCESS OR SPRINKLER PROTECTION

L104.1 Building access or sprinkler protection. An approved automatic sprinkler system shall be provided throughout a basement or a story that:

1. Exceeds 1,500 square feet (139.3 m^2) in area; and

2. Does not have a minimum of 20 square feet (1.86 m^2) of opening entirely above the adjoining ground level in each 50 lineal feet (15 240 mm), or fraction thereof, of exterior wall on at least one side of the building. Openings shall have a minimum clear dimension of 30 inches (762 mm).

Additionally, and notwithstanding the application of the foregoing criteria, if any portion of a basement is located more than 75 feet (22 860 mm) from required openings, the basement shall be provided with an

approved automatic sprinkler system throughout. The distance of 75 feet shall be as measured in a straight line without regard to intervening walls or other objects.

Exception: Existing parking garages with no other occupancies may substitute an automatic fire alarm system utilizing "rate-of-rise" detectors when coupled with a smoke-removal system capable of six air changes per hour.

SECTION L105
STANDPIPES

L105.1 Standpipes. Any building over four stories in height shall be provided with an approved Class I or Class III standpipe system.

SECTION L106
SMOKE DETECTORS

L106.1 General. Day-care centers, dwelling units and guest rooms in hotels or lodging houses that are used for sleeping purposes shall be provided with smoke detectors installed in accordance with the requirements of the *Fire Code*.

L106.2 Power source. Smoke detectors may be battery operated or may receive their primary power from the building wiring when such wiring is served from a commercial source. Wiring shall be permanent and without disconnecting switches other than those required for over current protection.

L106.3 Location with dwelling units. In dwelling units, detectors shall be mounted on the ceiling or wall at a point centrally located in the corridor or area giving access to each separate sleeping area. Where sleeping units are on an upper level, the detector shall be placed at the center of the ceiling directly above the stairway. Detectors shall also be installed in the basements of dwelling units having stairways that open from the basement into the dwelling. Detectors shall sound an alarm audible in all sleeping areas of the dwelling unit in which they are located.

L106.4 Location in efficiency dwelling units and hotels. In efficiency dwelling units, hotel suites and in hotel sleeping units, detectors shall be located on the ceiling or wall of the main room or hotel sleeping unit. When sleeping units within an efficiency dwelling unit or hotel suite are on an upper level, the detector shall be placed at the center of the ceiling directly above the stairway. When actuated, the detector shall sound an alarm audible within the sleeping area of the dwelling unit, hotel suite or sleeping unit in which it is located.

SECTION L107
SEPARATION OF OCCUPANCIES

L107.1 General. Occupancy separations shall be provided as specified in Section 302 of this code. When approved by the building official, existing wood lath and plaster in good condition or ½ inch (12.7 mm) gypsum wallboard may be acceptable where one-hour occupancy separations are required.

SECTION L108
FIRE ALARMS

L108.1 General. High-rise buildings as defined in Section 403 of this code shall be equipped with an approved manual fire alarm system that will provide an audible signal at a constantly attended location within the building.

Exception: Systems that are connected to a central, proprietary or remote station service.

SECTION L109
EXTENSION OF TIME

L109.1 Application. The owner of a building may apply to the building official for an extension of time to comply with any requirement of this appendix chapter. The owner of the building shall set forth the following information on such an application:

1. The specific requirements of this chapter for which the owner is seeking an extension of time;

2. The period of time the owner believes is necessary to meet the requirements; and

3. The reasons why the owner believes such an extension of time is necessary.

An application shall be sworn to by the owner of the building.

L109.2 Approval. No request for an extension of time shall be granted unless the building official finds that such an extension of time is reasonably necessary to perform the work and that granting such an extension of time will not result in an unreasonable risk to the safety of the occupants of the building or to others.

L109.3 Denial. If the building official denies any request for an extension of time under this section, the owner of the building may appeal such a decision to the General Appeals Board. If the General Appeals Board upholds the decision of the building official on the matter, the board's decision may be appealed to City Council, if notice of appeal, addressed to City Council, is delivered to the office of the City Secretary within 10 days of the date of the board's decision. Appeals shall be subject to City Council Rule 12 (see Section 2-2 of the City Code).

SECTION L110
EXCEPTIONS

L110.1 Application. The owner of a building may apply to the General Appeals Board for an exception from any requirement of this appendix chapter. The owner of the building shall set forth the following information on such application:

1. The specific requirements for which the owner is seeking an exception; and

2. The reasons the owner believes that an exception should be granted.

An application shall be sworn to by the owner of the building.

L110.2 Approval. No request for an exception shall be granted under this section unless the General Appeals Board finds that:

1. The application of certain requirements of this chapter is not reasonably necessary to protect the safety of the occupants of the building or other persons; or

2. Literal application of certain requirements of this chapter would have an unduly harsh impact so as to substantially destroy the value of the property to its owner after considering the totality of the circumstances.

L110.3 Denial. If the General Appeals Board denies any request for an exception under this section, the owner of the building may appeal such a decision to the City Council, if notice of the appeal, addressed to City Council, is delivered to the office of the City Secretary within 10 days of the date of the board's decision. Appeals shall be subject to City Council Rule 12 (see Section 2-2 of the City Code).

APPENDIX M
MINIMUM PROVISIONS FOR CHANGE OF OCCUPANCY

SECTION M101
GENERAL

M101.1 Change of occupancy. The character of the occupancy of existing buildings and structures may be changed, provided the building or structure meets the requirements of this chapter and the requirements of Appendix L. Where no specific requirements are included herein, the building or structure shall comply with this code as for new construction.

Every change of occupancy to one classified in a different group or a different division of the same group shall require a new certificate of occupancy, regardless of whether any alterations to the building are required by this appendix.

If the building or portion thereof does not conform to the requirements of this appendix for the proposed occupancy group or division, the building or portion thereof shall be made to conform to this code as for new construction except as specified in this code. The building official shall be permitted to issue a new certificate occupancy stating that the building complies with this code.

M101.2 Special uses or occupancies. Where the character or use of an existing building or part of an existing building is changed to one of the following special use or occupancy categories, the building or structure shall comply with this code as for new construction.

1. Covered mall buildings.
2. Atriums.
3. Motor-vehicle-related occupancies.
4. Aircraft-related occupancies.
5. Motion picture projection rooms.
6. Stages and platforms.
7. Special amusement buildings.
8. Incidental use areas.
9. Hazardous materials.
10. Underground buildings.

M101.3 Hazard category classifications. The relative degree of hazard between different occupancy groups or between divisions of the same group shall be as set forth in the hazard category classifications in Tables M101.3(1) through M101.3(3). An existing building may have its occupancy changed to an occupancy within the same hazard group or to an occupancy in a lesser hazard group without complying with all the provisions of this appendix. An existing building shall comply with the requirements of this code

as for new construction, except as specified in this appendix, when a change in occupancy will place it in a higher hazard group or when the occupancy is changed to Group A, E, H or I.

TABLE M101.3(1)
HAZARD CATEGORIES AND CLASSIFICATIONS, HEIGHTS AND AREAS

RELATIVE HAZARD	OCCUPANCY CLASSIFICATION
1	H (highest hazard group)
2	A-1, A-2, A-3, A-4, I, R-1, R-2, R-4
3	E, F-1, S-1, M
4	B, F-2, S-2, A-5, R-3, U (lowest hazard group)

TABLE M101.3(2)
HAZARD CATEGORIES AND CLASSIFICATIONS, LIFE SAFETY AND EXITS

RELATIVE HAZARD	OCCUPANCY CLASSIFICATION
1	H (highest hazard group)
2	I-2, I-3, I-4
3	A, E, I-1, M, R-1, R-2, R-4
4	B, F-1, R-3, S-1
5	F-2, S-2, U (lowest hazard group)
6	U (lowest hazard group)

TABLE M101.3(3)
HAZARD CATEGORIES AND CLASSIFICATIONS OF EXTERIOR WALLS AND STAIRWAY ENCLOSURES

RELATIVE HAZARD	OCCUPANCY CLASSIFICATION
1	H (highest hazard group)
2	F-1, M, S-1
3	A, B, E, I, R

4	F-2, S-2, U (lowest hazard group)

SECTION M102
HEIGHTS AND AREAS

M102.1 Heights and areas of buildings and structures shall meet the requirements of this code for the new occupancy as for new construction.

Exception: Existing buildings exceeding the maximum allowable heights and areas permitted for new buildings may undergo a change of occupancy if the hazard level of the new occupancy is equal to or less than the existing hazard group as shown in Table M101.3(1).

SECTION M103
FIRE SAFETY

M103.1 General. When a change of occupancy is made to a higher hazard group as shown in Table M101.3(2), all elements of the exit system shall comply with the requirements of this code as for new construction.

Exception: Existing corridors and stairways meeting the requirements of this code may be used.

M103.2 Existing means of egress systems. Existing means of egress systems complying with Appendix L shall be accepted if the occupancy change is to an equal or lesser hazard group when evaluated in accordance with Table M101.3(2).

M103.3 Separation of occupancies. When approved by the building official, existing wood lath and plaster in good condition or 1/2-inch-thick (12.7 mm) gypsum wallboard may be accepted where a one-hour occupancy separation is required.

M103.4 Vertical shafts.

M103.4.1 Enclosure of shafts. Vertical shafts may be designed to meet the requirements of atria as required by this code for new construction or the requirements of this section.

M103.4.2 Stairways. Interior stairways shall be enclosed as required by this code for new construction when a change of occupancy is made to a higher hazard group as shown in Table M101.3(2).

Exceptions:

1. In other than Group I Occupancies, an enclosure will not be required for openings serving only one adjacent floor and not connected with corridors or stairways serving other floors.

2. Existing stairways not enclosed need not be enclosed in a continuous vertical shaft if each story is separated from other stories by one-hour fire-resistive construction or approved wired glass set in steel frames and all exit corridors are sprinklered. The openings between the corridor and occupant space shall have at least one sprinkler head above the openings on the tenant side. The sprinkler system may be supplied from the domestic water-supply system, provided the system is of adequate pressure, capacity and sizing for the combined domestic and sprinkler requirements.

M103.4.3 Other vertical shafts. Interior vertical shafts, including, but not limited to, elevator hoistways and service and utility shafts, shall be enclosed with a minimum of one-hour fire-resistive construction.

Exceptions:

1. Vertical openings other than stairways need not be enclosed if the entire building is provided with an approved automatic sprinkler system.

2. Where one-hour fire-resistive floor construction is required, vertical shafts need not be enclosed when such shafts are blocked at every floor level by the installation of not less than 2 full inches (51 mm) of solid wood or equivalent construction.

M103.4.4 Openings into vertical enclosures. All openings into verticle shafts shall be protected by fire assemblies having a fire-protection rating of not less than one hour and shall be maintained self-closing or shall be automatic closing by actuation of a smoke detector. All other openings shall be fire protected in an approved manner. Existing fusible link-type automatic door-closing devices may be permitted if the fusible link rating does not exceed 135°F (57°C).

SECTION M104
PROPERTY PROTECTION

M104.1 Fire resistance of walls. Exterior walls shall have fire resistance and opening protection as set forth in this code for new construction. This provision shall not apply to walls at right angles to the property line.

Exceptions:

1. Where a fire-resistive rating greater than two hours is required for a building of any type of construction, existing noncombustible exterior walls having a fire-resistive rating equivalent to two hours as determined by Section 720.1 may be accepted, provided:

   1.1 The building is classified as Group A, B, F, M or S; and

   1.2 The building does not exceed three stories in height.

2. Existing exterior walls shall be accepted if the occupancy is changed to a hazard group, which is equal to or less than the existing occupancy as defined in Table M101.3(3).

M104.2 Opening protection. Openings in exterior walls shall be protected as required for new construction. When openings in the exterior walls are required to be protected due to distance from the property line, the sum of the area of such openings shall not exceed 50 percent of the total area of the wall in each story.

Exceptions:

1. Protected openings shall not be required for Group R-1 occupancies that do not exceed three stories in height and are located not less than 3 feet (914 mm) from the property line.

2. Where opening protection is required, an automatic fire-extinguishing system throughout may be substituted for opening protection.

3. Opening protection may be omitted when the change of occupancy is to an equal or lower hazard classification in accordance with Table M101.2(3).

SECTION M105
STRUCTURAL SAFETY

M105.1 Vertical loads. Buildings and structures shall comply with the requirements for vertical load for new construction.

Exceptions:

1. Analysis and test methods for evaluation of existing materials may be conducted using the methods specified in the code under which the building was constructed, or other standards as approved by the building official.

2. Existing roofs may be retained provided

   2.1 Any unsafe or overloaded conditions are corrected; and

   2.2 The roof dead load is not increased by use, reroofing or added equipment.

M105.2 Wind loads. Buildings shall not be considered as dangerous buildings when subjected to the requirements for new construction.

SECTION M106
LIGHT AND VENTILATION

M106.1 Light and ventilation. Light and ventilation shall comply with the requirements for new construction.

APPENDIX N
AIRPORT SOUND ATTENUATION REQUIREMENTS

SECTION AN101
GENERAL

AN101.1 Purpose. The purpose of this appendix to set forth sound attenuation specifications for buildings when such sound attenuation is required by Article VI, Chapter 9 of the City Code to achieve an interior sound level of 45 dBA.

AN101.2 Applicability. These provisions shall apply under circumstances where an airport land use permit is required under Section 9-381 a (2) and (3) of the City Code, and are in addition to other applicable building standards set forth elsewhere in this code.

AN101.3 Alternate compliance. Alternative means or methods which equal or exceed the standards set forth in these provisions may be used when approved by the building official in accordance with section 104.11 of this code.

SECTION AN201
DEFINITIONS

AN201.1 Definitions. For purposes of these provisions, the following words shall have the meanings shown herein.

SOUND TRANSMISSION CLASS (STC). An integer rating relating to the quality of sound attenuation for building partitions such as walls, ceilings, doors, and windows.

SECTION AN301
WALLS

AN301.1 General. The specific exterior wall assemblies set forth in AN 301.2 and AN301.3 shall include the interior finishes set forth therein.

> **Exception:** Exterior wall assemblies or materials that have been tested or listed with a minimum STC rating of 40.

AN301.2 Brick veneer. When exterior walls are constructed using brick veneer, a minimum of ½ inch gypsum drywall shall be applied as the interior finish.

AN301.3 Vinyl or cement sidings. When exterior walls are constructed using vinyl or cement sidings, a minimum of 5/8 inch gypsum drywall shall be applied as the interior finish.

AN301.4 Other assemblies and materials. All other exterior wall assemblies or materials shall have a tested or listed minimum STC rating of 40.

SECTION AN401
WINDOWS

AN401.1 Windows. All windows shall have a minimum STC rating of 40 when tested in accordance with ASTM E 90.

AN401.2 Insulation at windows. The cavity between the framing and the window frame shall be insulated with fiberglass or foam insulation to the depth of the window frame.

SECTION AN501
DOORS

AN501.1 Doors. All exterior doors shall be provided with a minimum STC Rating of 40 when tested in accordance with ASTM E 90.

> **Exception:** An exterior door may have a tested or listed STC rating of less than 40 when installed with a storm door which when combined, achieve a minimum tested or listed STC rating of 40.

SECTION AN601
ROOF/CEILING ASSEMBLIES

AN601.1 General. Roof/ceiling assemblies shall be constructed in accordance with the requirements of AN601.2 or AN601.3.

> **Exception:** Roof/ceiling assemblies or materials that have been tested or listed with a minimum STC rating of 40.

AN601.2 Ceilings with unconditioned attic space above. Ceilings with unconditioned attic space above shall be insulated with a minimum of ½ inch gypsum drywall on the interior ceiling side covered with a minimum of 12 inches of blown in fiberglass insulation.

AN601.3 Ceilings without attic space above. Ceilings without attic space above shall be insulated with a minimum of 5/8 inch gypsum drywall on the interior side filled with a minimum of 9 inches of fiberglass batt insulation with a 1 inch air space between the roof sheathing and the fiberglass.

SECTION AN701
MECHANICAL SYSTEMS

AN701.1 Required systems. All heating, ventilation and air conditioning systems shall be central heating and air conditioning systems with ducted supply and return.

> **Exception:** A ductless system may be utilized if the system does not require an exterior wall penetration(s).