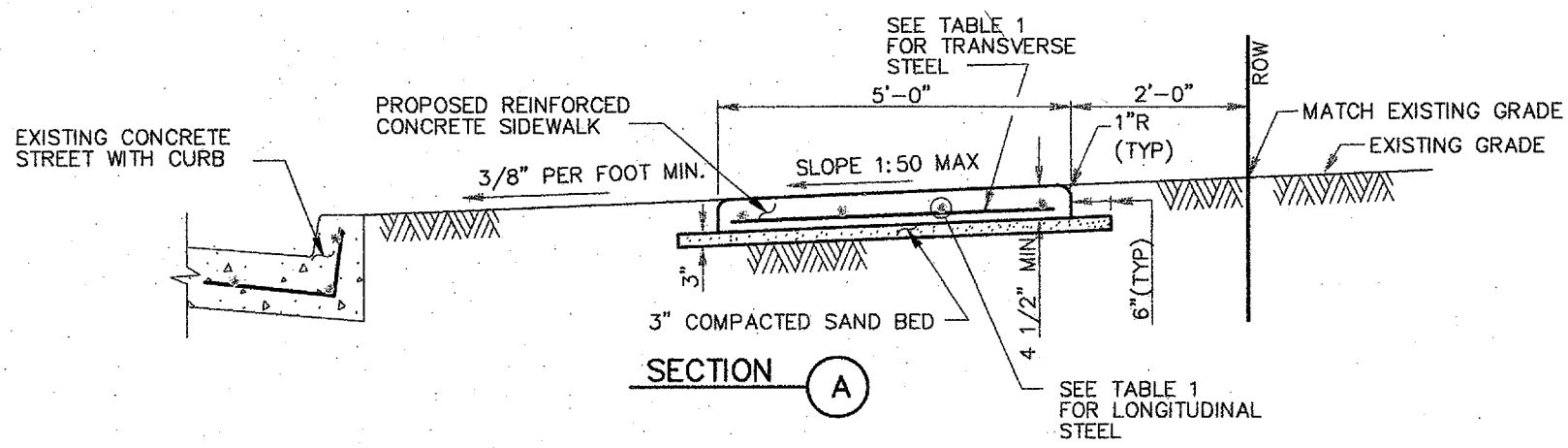

SECTION (A)

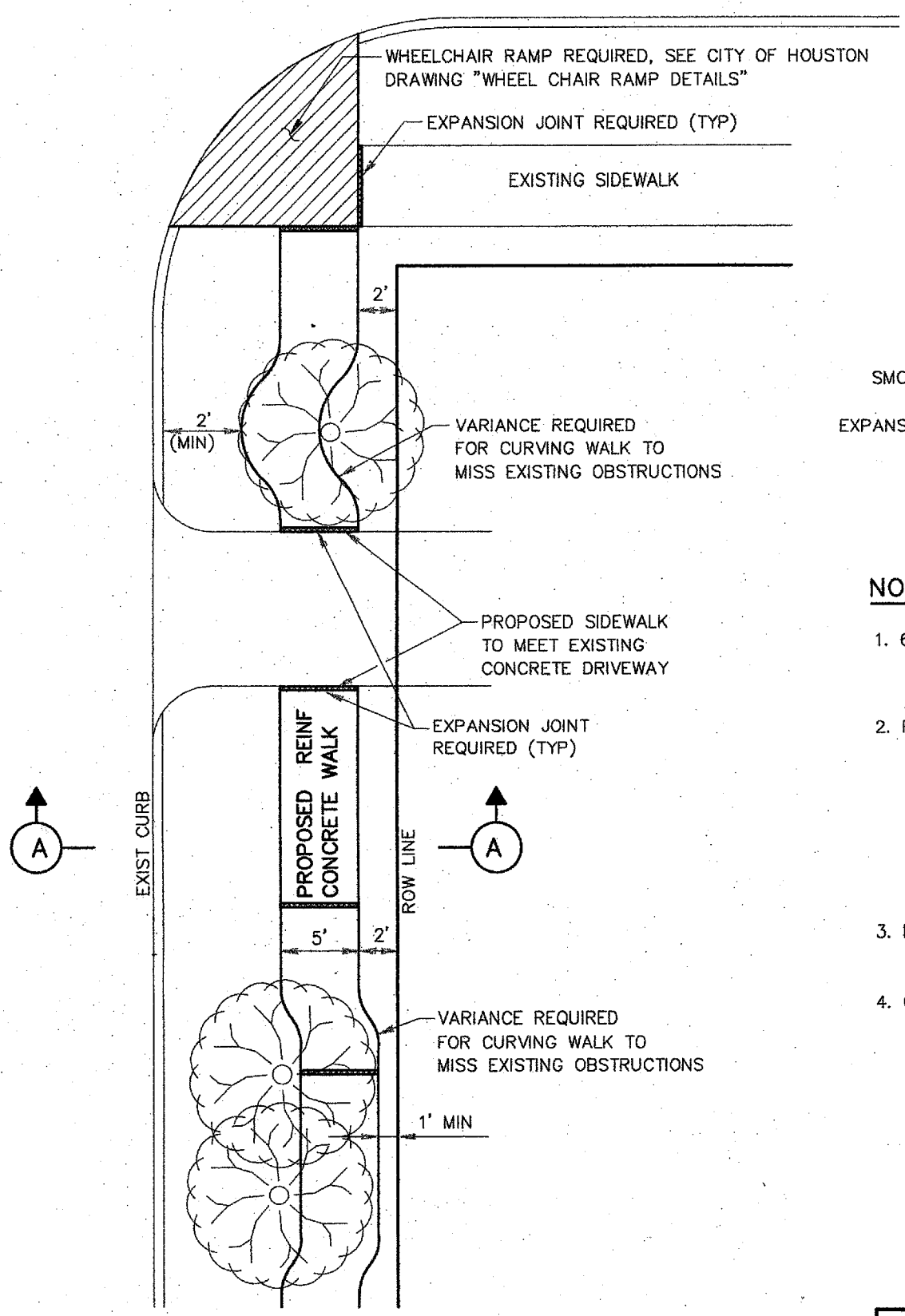

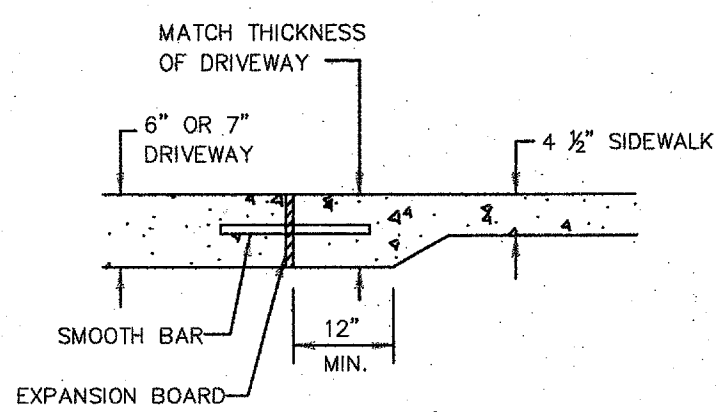

DRIVEWAY/SIDEWALK
HEADER DETAIL

NOTES:

1. 6X6 – W2.9XW2.9 WELDED WIRE FABRIC MAY BE USED IN LIEU OF THE REINFORCING STEEL GIVEN IN TABLE 1.
2. REINFORCED CONCRETE SIDEWALKS THRU DRIVEWAYS OPENINGS SHALL BE EITHER 6" THICK OR 7" THICK AS SPECIFIED ON 6" STABILIZED SUBGRADE. FOR THE REINFORCING STEEL REQUIREMENTS, SEE CITY OF HOUSTON DRAWING "REINFORCED CONCRETE DRIVEWAY DETAILS ON CURB TYPE STREETS".
3. MAXIMUM SPACING FOR EXPANSION JOINTS SHALL BE 40 FEET.
4. CONTRACTOR SHALL CONSTRUCT SIDEWALK IN A MANNER NOT TO BLOCK THE NATURAL DRAINAGE FROM ADJACENT PROPERTY.

TABLE 1

REINFORCING STEEL INFORMATION
FOR 4 ½ " THICK SIDEWALKS
EXPANSION JOINT SPACING = 40 FT
fc' = 3,000 PSI AND fy = 60,000 PSI

SIDEWALK THICKNESS (IN)	SIDEWALK WIDTH (FT)	LONGITUDINAL STEEL # 3 BARS			TRANSVERSE STEEL # 3 BARS SPACING (IN)
		NUMBER OF BARS	SPACING (IN)	END BAR SPACING (IN)	
4.5	5	3	27	3	48
4.5	6	4	22	3	48

CITY OF HOUSTON
DEPARTMENT OF PUBLIC WORKS AND ENGINEERING

CONCRETE SIDEWALK DETAILS
FOR STREETS WITH CURBS

(NOT TO SCALE)

APPROVED BY:	APPROVED BY:
CITY ENGINEER	DIRECTOR OF PUBLIC WORKS AND ENGINEERING
EFF DATE: JUL-01-2010	DWG NO: 02775-01