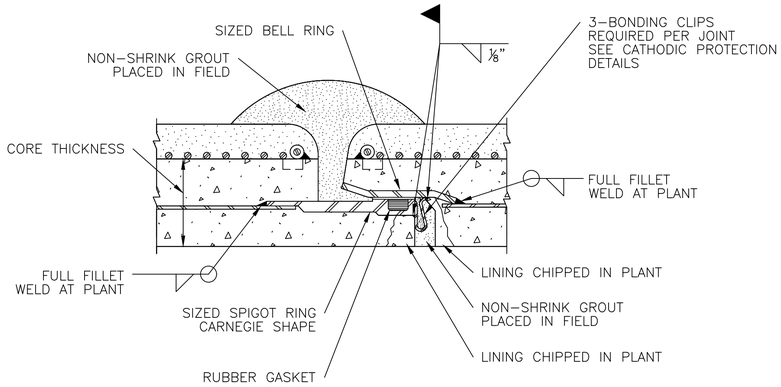

1 JOINT – EMBEDDED CYLINDER PIPE

FIELD PROCEDURE: WITH THE JOINT ENGAGED THE INSIDE WELD WILL BE MADE BY ACCESS THROUGH THE PIPE. THE JOINT GROUT SHALL THEN BE PLACED AS SHOWN.

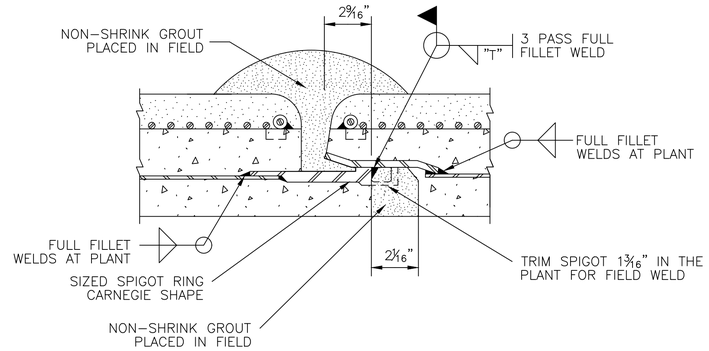

2 WELDED JOINT WITH TRIMMED SPIGOT – EMBEDDED CYLINDER PIPE

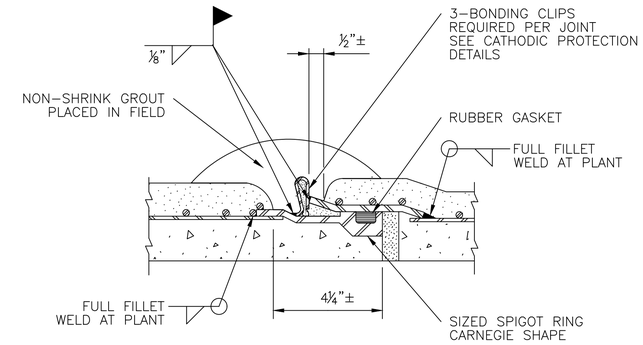

3 JOINT – BAR WRAPPED CYLINDER PIPE

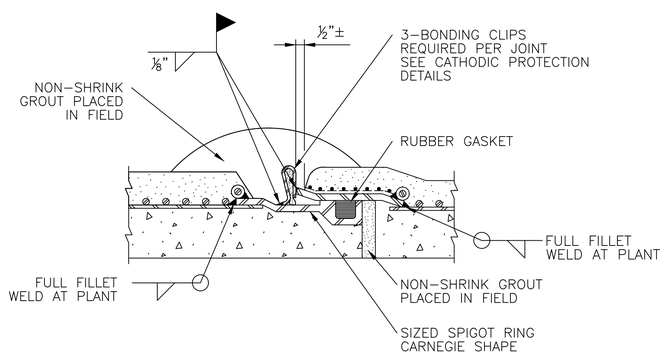

4 JOINT – LINED CYLINDER PIPE

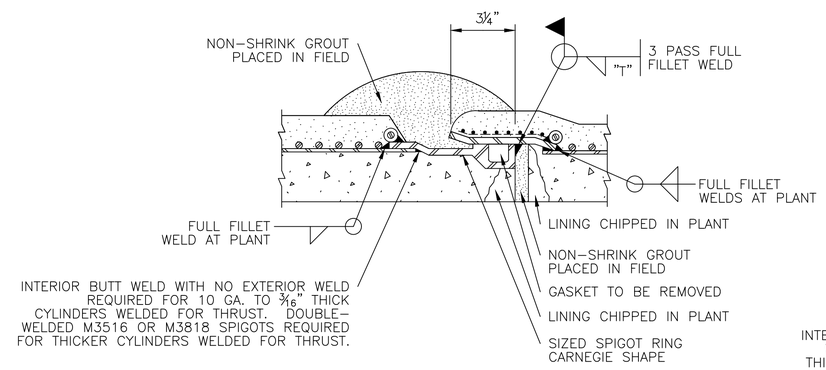

5 WELDED JOINT – LINED CYLINDER PIPE

(INTERIOR WELD FOR WATERLINES 36-INCHES DIAMETER AND LARGER)

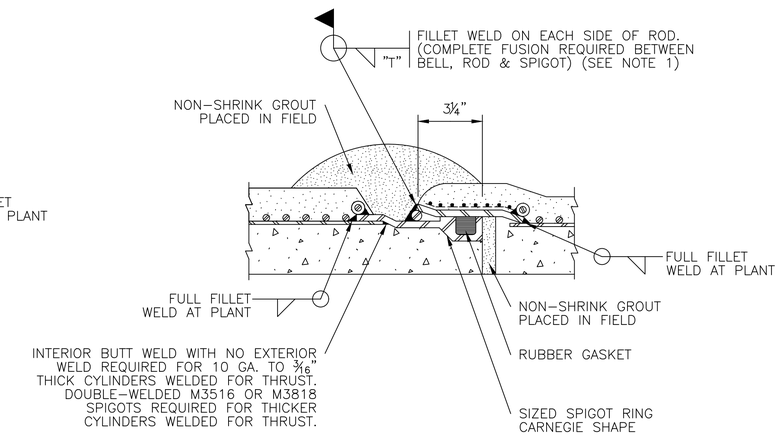

6 WELDED JOINT – LINED CYLINDER PIPE

(EXTERIOR WELD FOR WATER LINES LESS THAN 36-INCHES IN DIAMETER)

FIELD PROCEDURE: PLACE STEEL ROD SNUGLY INTO THE RECESS BETWEEN THE BELL AND SPIGOT. THE WELD MUST BE CONTINUOUS.

NOTES:

1. T = STEEL CYLINDER THICKNESS AND SIZE OF FILLET ATTACHMENT WELD.
2. FLEXIBLE MASTIC SEALER SHALL BE APPLIED TO THE EXTERIOR OF THE JOINT PRIOR TO JOINT ENGAGEMENT WHEN PIPE IS INSTALLED IN A TUNNEL OR ENCASEMENT PIPE.

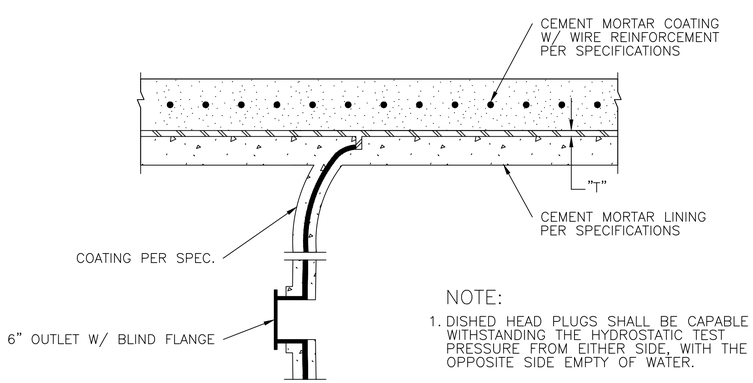

NOTE:

1. DISHED HEAD PLUGS SHALL BE CAPABLE OF WITHSTANDING THE HYDROSTATIC TEST PRESSURE FROM EITHER SIDE, WITH THE OPPOSITE SIDE EMPTY OF WATER.

7 INTERNAL ELLIPTICAL DISHED HEAD PLUG

CEMENT MORTAR LINING AND CEMENT MORTAR COATED STEEL PIPE SPECIAL

FIELD PROCEDURE: WITH THE JOINT ENGAGED THE INSIDE WELD WILL BE MADE BY ACCESS THROUGH THE PIPE. THE JOINT GROUT SHALL THEN BE PLACED AS SHOWN.

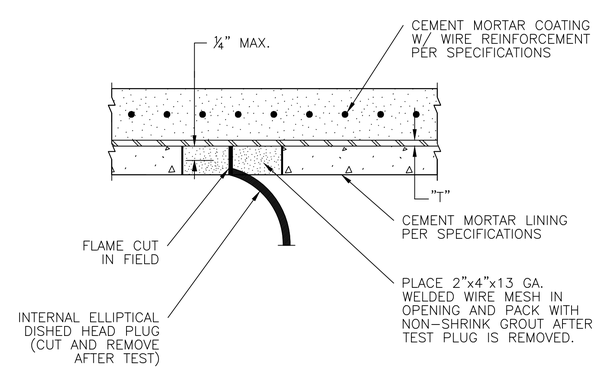

8 INTERNAL ELLIPTICAL DISHED HEAD PLUG REMOVAL

CEMENT MORTAR LINING AND CEMENT MORTAR COATED STEEL PIPE SPECIAL

STANDARD LDWL
PIPE DETAILS
(SHEET 1 OF 2)

NO SCALE

XX

NOTES:

1. OUTSIDE WELD MAY BE SUBSTITUTED FOR INSIDE WELD.

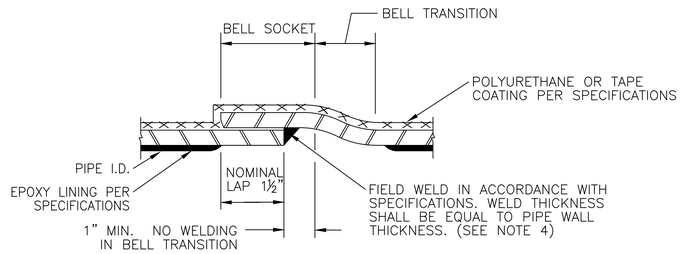

1 LAP–WELD FIELD JOINT – STEEL PIPE JOINT

FLEXIBLE COATING AND LINING

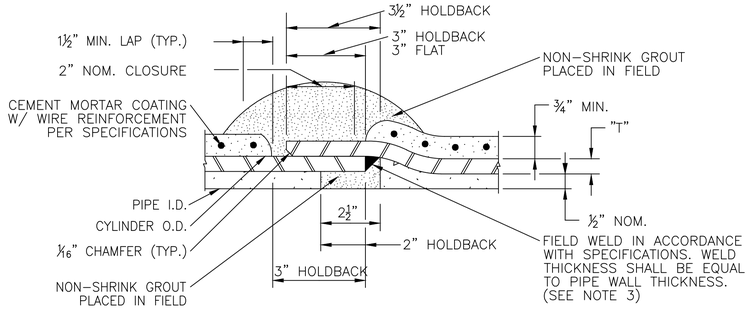

2 LAP–WELD FIELD JOINT – STEEL PIPE JOINT

CEMENT MORTAR LINED & CEMENT MORTAR COATED

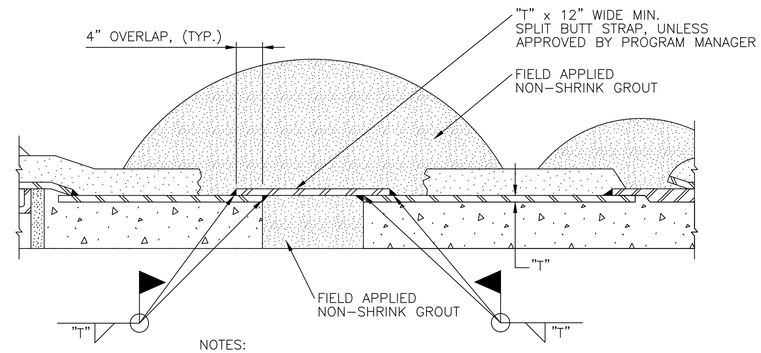

NOTES:

1. WELD SIZE SHALL MATCH THICKNESS OF BUTT STRAP AND CARRIER PIPE, AS RECOMMENDED BY THE PIPE MANUFACTURER.
2. INTERNAL WELD NOT REQUIRED FOR 30" DIAMETER PIPE AND SMALLER.
3. NO ANGULAR DEFLECTION ALLOWED.

3 CLOSURE PIECE

FOR STEEL PIPE WITH CEMENT MORTAR LINED AND CEMENT MORTAR COATED (SIMILAR FOR FLEXIBLE COATING AND LINING)

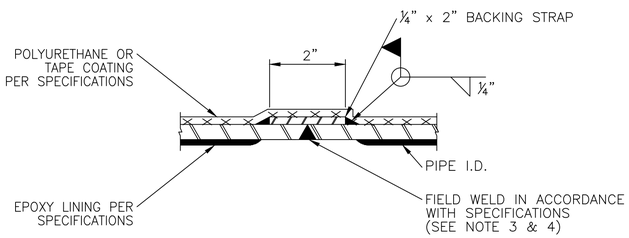

4 BUTT WELD FIELD JOINT – STEEL PIPE JOINT

FLEXIBLE COATING AND LINING

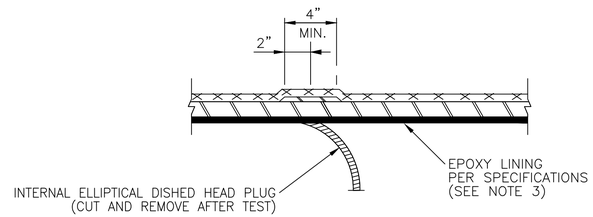

5 INTERNAL ELLIPTICAL DISHED HEAD PLUG REMOVAL

FOR STEEL PIPE WITH FLEXIBLE COATING AND LINING

FIELD PROCEDURE: PLACE A FILLER ROD OR STEEL ROD SNUGLY INTO THE RECESS BETWEEN THE BELL AND SPIGOT. THE WELD MUST BE CONTINUOUS.

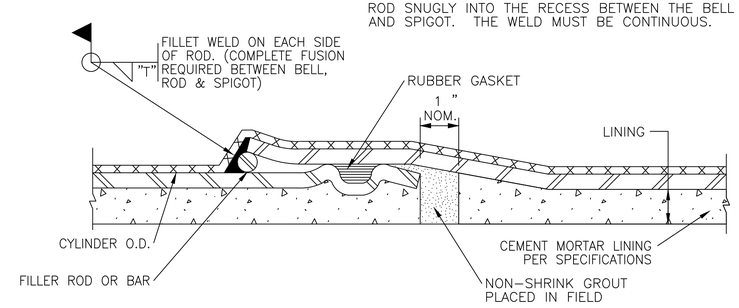

6 FIELD WELDED O–RING – STEEL PIPE JOINT

FLEXIBLE COATING AND CEMENT MORTOR LINING (FOR ADJUSTMENTS ONLY AS APPROVED BY ENGINEER AND PIPE MANUFACTURER.)

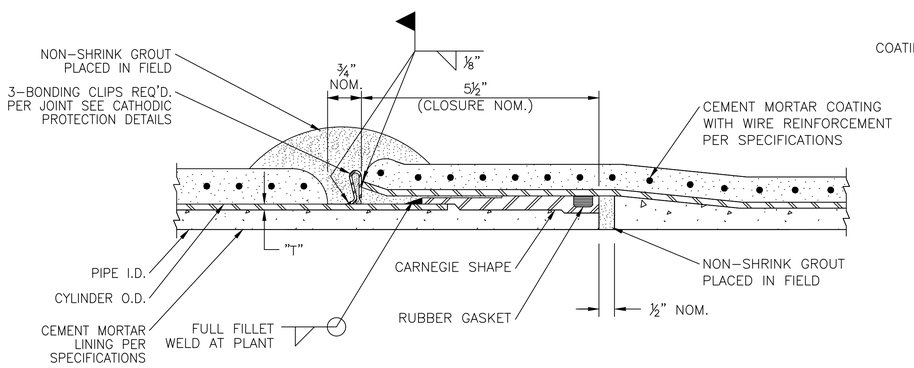

7 CARNEGIE SPIGOT AND EXPANDED BELL – STEEL PIPE JOINT

CEMENT MORTAR LINED & CEMENT MORTAR COATED

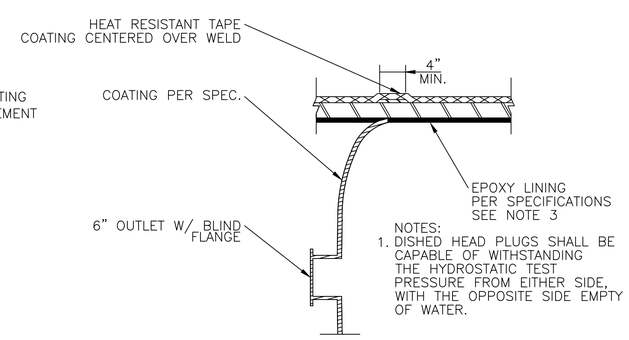

NOTES:

1. DISHED HEAD PLUGS SHALL BE CAPABLE OF WITHSTANDING THE HYDROSTATIC TEST PRESSURE FROM EITHER SIDE, WITH THE OPPOSITE SIDE EMPTY OF WATER.

8 INTERNAL ELLIPTICAL DISHED HEAD PLUG

FOR STEEL PIPE WITH FLEXIBLE COATING AND LINING

NOTES:

1. T = STEEL PIPE WALL THICKNESS AND SIZE OF FILLET ATTACHMENT WELD.
2. ALL REFERENCES TO PIPE DIAMETER FOR THIS PROJECT SHALL SIGNIFY SIZE MEASURED TO INSIDE DIAMETER OF THE LINED PIPE.
3. DETAILS 1, 4, 5 AND 8 SHOW EPOXY LINING. CEMENT MORTAR LINING TO BE SIMILAR TO DETAILS ON THIS SHEET SHOWING CEMENT MORTAR LINED PIPE, AS APPROVED BY PROGRAM MANAGER.
4. SEE SPECIFICATIONS FOR REPAIR OF EPOXY LINING.
5. WHEN CEMENT MORTAR COATING IS USED FOR STEEL PIPE, FLEXIBLE MASTIC SEALER SHALL BE APPLIED TO THE EXTERIOR OF THE JOINT PRIOR TO JOINT ENGAGEMENT WHEN PIPE IS INSTALLED IN A TUNNEL OR ENCASEMENT PIPE.

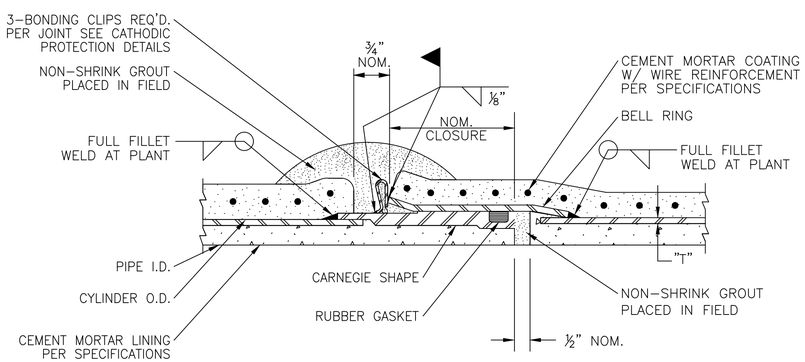

9 CARNEGIE JOINT – STEEL PIPE JOINT

CEMENT MORTAR LINED & CEMENT MORTAR COATED

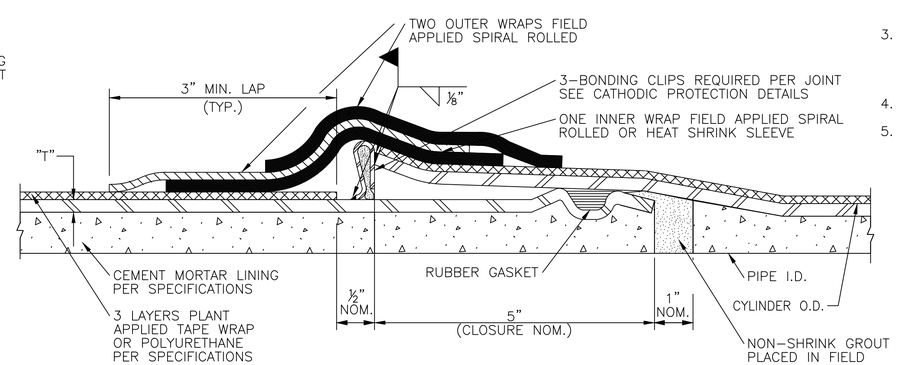

10 O–RING – STEEL PIPE JOINT

CEMENT MORTAR LINED & FLEXIBLE COATING

STANDARD LDWL PIPE DETAILS (SHEET 2 OF 2)

NO SCALE

XX

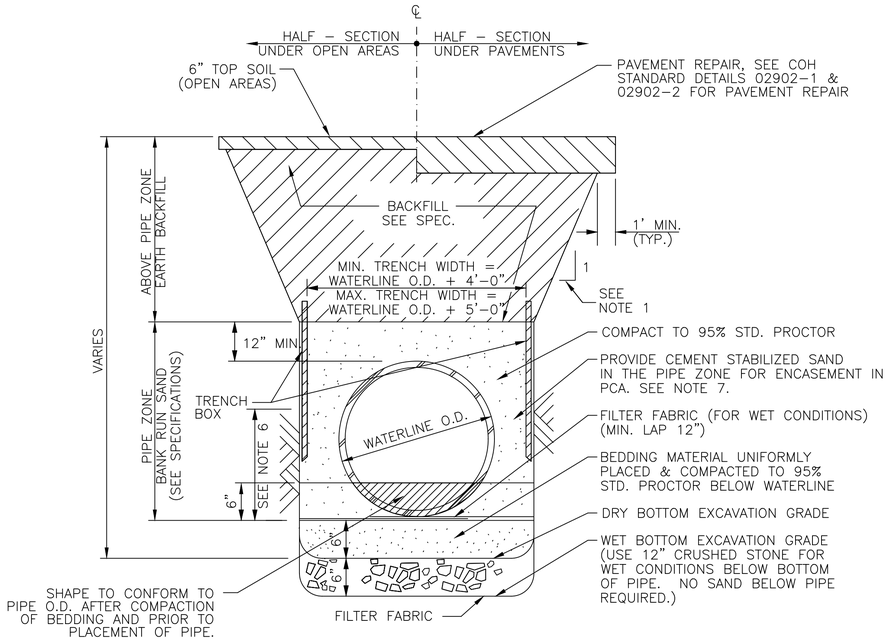

1 EXCAVATION & BACKFILL DETAIL FOR LARGE DIAMETER WATER MAIN

NO SCALE

NOTES:

1. SEE TRENCH SAFETY SYSTEM SPECIFICATIONS FOR MAXIMUM ALLOWABLE SLOPES.
2. FOR WET BOTTOM EXCAVATION LIMITS OF CRUSHED STONE, EXTEND AS SHOWN.
3. KEY CONCRETE TRENCH DAM MINIMUM OF 6 INCHES INTO TRENCH BOTTOM AND WALLS.
4. TRENCH DAM MAY BE FORMED OR UNFORMED. ACTUAL SHAPE OF CONCRETE TRENCH DAM CROSS SECTION MAY BE DETERMINED BY CONTRACTOR IN FIELD, MEETING 6–INCH MINIMUM THICKNESS AND 6–INCH KEY DEPTH REQUIREMENTS.
5. TRENCH DAM SHALL BE PLACED AT LEAST 5 FT. AWAY FROM ANY PIPELINE STRUCTURE (EACH SIDE). SEE SECTION 02317 FOR OTHER REQUIREMENTS.
6. THIS PORTION OF PIPE EMBEDMENT ZONE MUST BE RECOMPACTED TO PROPER DENSITIES AFTER MOVING SUPPORT SYSTEM FORWARD.
7. USE FILTER FABRIC AS A BOND BREAKER BETWEEN CEMENT STABILIZED SAND AND PIPE.

MAXIMUM PAVEMENT DISTRUBANCE FOR WL INSTALLATION

WATERLINE I.D. (in.)	DIMENSION (ft.)
24	10
30	11
36	12
42	13
48	14
54	15
60	16
66	16
72	17
78	17
84	18
96	18

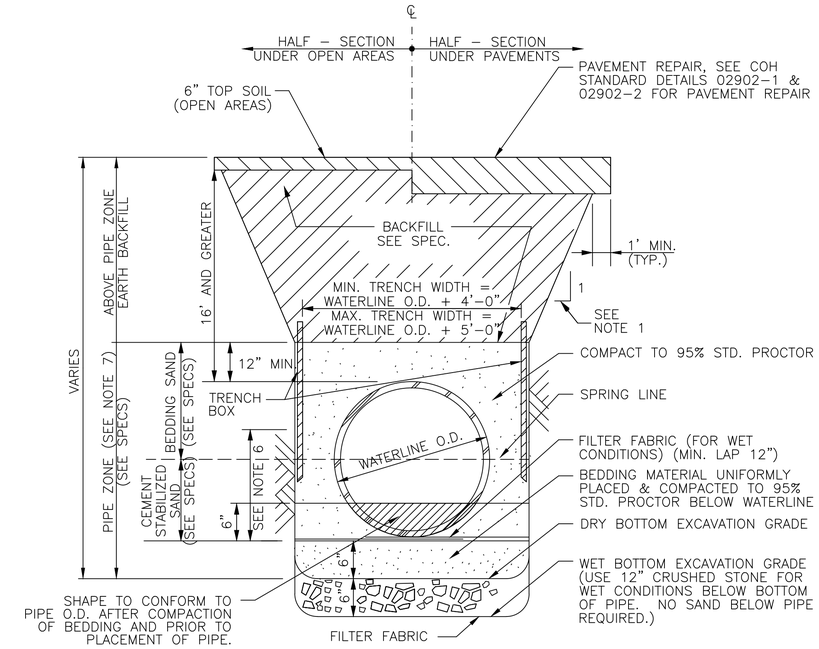

2 EXCAVATION & BACKFILL DETAIL (FOR LARGE DIAMETER WATER MAIN WITH HEIGHT OF EARTH COVER GREATER THAN 16')

NO SCALE

NOTES:

1. SEE TRENCH SAFETY SYSTEM SPECIFICATIONS FOR MAXIMUM ALLOWABLE SLOPES.
2. FOR WET BOTTOM EXCAVATION LIMITS OF CRUSHED STONE, EXTEND AS SHOWN.
3. KEY CONCRETE TRENCH DAM MINIMUM OF 6 INCHES INTO TRENCH BOTTOM AND WALLS.
4. TRENCH DAM MAY BE FORMED OR UNFORMED. ACTUAL SHAPE OF CONCRETE TRENCH DAM CROSS SECTION MAY BE DETERMINED BY CONTRACTOR IN FIELD, MEETING 6–INCH MINIMUM THICKNESS AND 6–INCH KEY DEPTH REQUIREMENTS.
5. TRENCH DAM SHALL BE PLACED AT LEAST 5 FT. AWAY FROM ANY PIPELINE STRUCTURE (EACH SIDE). SEE SECTION 02317 FOR OTHER REQUIREMENTS.
6. THIS PORTION OF PIPE EMBEDMENT ZONE MUST BE RECOMPACTED TO PROPER DENSITIES AFTER MOVING SUPPORT SYSTEM FORWARD.
7. USE POLYETHYLENE WRAP AS A BOND BREAKER BETWEEN CEMENT STABILIZED SAND AND PIPE.

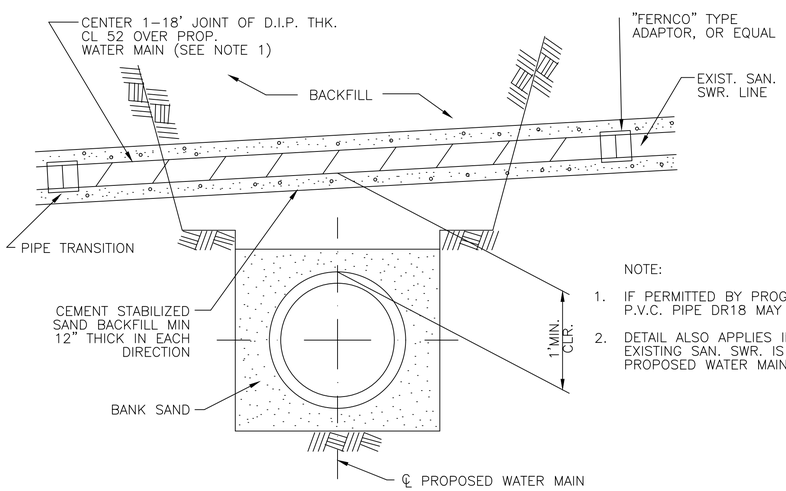

NOTE:

1. IF PERMITTED BY PROGRAM MANAGER, P.V.C. PIPE DR18 MAY BE USED.
2. DETAIL ALSO APPLIES IN CASES WHERE EXISTING SAN. SWR. IS LOCATED BELOW PROPOSED WATER MAIN.

3 D.I.P. OVER PROPOSED WATER LINE

NO SCALE

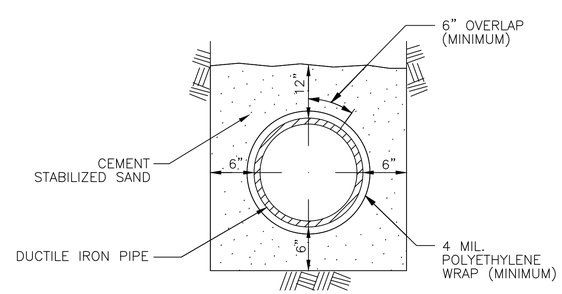

NOTES:

1. FOLLOWING EXCAVATION OF TRENCH, PLACE A 6" LAYER OF CEMENT STAB. SAND AT BOTTOM OF TRENCH. LAY POLYETHYLENE WRAP IN TRENCH, AND LAY PIPE ON TOP OF WRAP. FOLD WRAP AROUND PIPE WITH A 6" OVERLAP (MIN.) AND TIE AROUND PIPE WITH HEAVY BINDER TWINE, OR EQUAL, ON 6" CENTERS. PROVIDE A 12" OVERLAP (MIN.) AND TIE WITH HEAVY BINDER TWINE END LAPS. PLACE ADDITIONAL CEMENT SAND UP TO 12" ABOVE
2. ALL DUCTILE IRON PIPE SHALL HAVE A POLYETHYLENE "WRAP" OF 4 MIL. THICKNESS (MINIMUM) EXCEPT AS NOTED BELOW.
3. WHERE PIPE IS PLACED IN AN AUGER OR TUNNEL OR IN A CASING, PIPE IS TO HAVE A DOUBLE WRAP OF 4 MIL POLYETHYLENE AND SHALL BE BONDED ON 12" CENTERS WITH ½" STAINLESS STEEL BANDS. END LAPS TO BE AS SPECIFIED FOR TRENCH SECTIONS.
4. REFER TO SPECIFICATION SECTION 02528 – POLYETHYLENE ENCASEMENT/WRAP.

4 EMBEDMENT AND CORROSION PROTECTION FOR SANITARY SEWER DUCTILE IRON PIPE

NO SCALE

STANDARD LDWL EXCAVATION, BEDDING & BACKFILL DETAIL

NO SCALE

XX

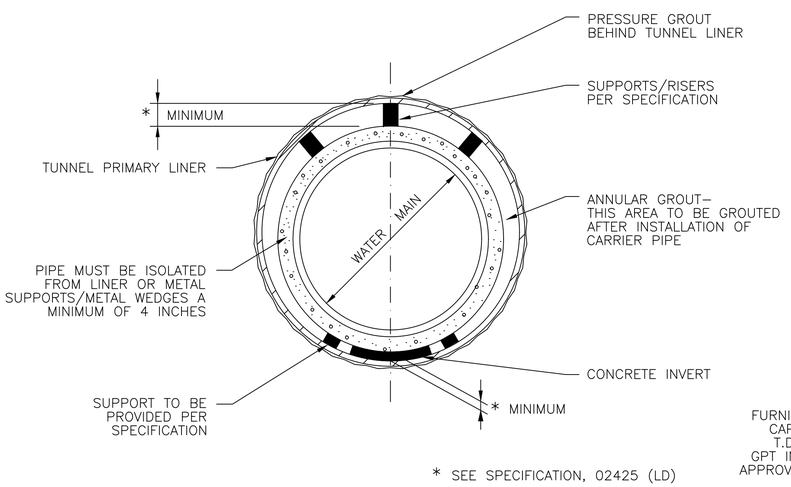

SECTION A–A

NOTES:

1. DETAIL IS FOR PRESTRESSED CONCRETE CYLINDER PIPE (BAR WRAPPED STEEL CYLINDER PIPE, STEEL PIPE AND D.I.P. ALTERNATE SIMILAR).
2. MINIMUM CLEARANCES SHOWN ON THE PLAN & PROFILE DRAWINGS ARE TO THE O.D. OF TUNNEL LINER. ADJUST PROFILE AS REQUIRED TO MAINTAIN CLEARANCES IDENTIFIED. NO SEPARATE PAY.

1 TUNNEL DETAIL FOR TUNNEL LINER / CASING FOR PCCP OR STEEL PIPE WITH MORTAR BANDS

(FOR WATER MAINS 24 INCHES IN DIAMETER AND LARGER)

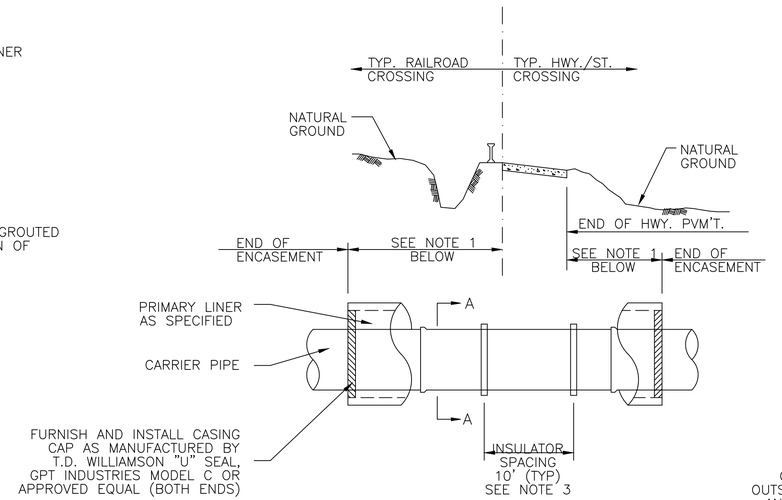

TUNNEL ELEVATION

NOTES:

1. LENGTH OF ENCASEMENT SHALL BE AS SHOWN ON THE PLAN & PROFILE DRAWINGS.
2. LAY CASING PIPE IN OPEN CUT, TUNNEL OR BORE, AS NOTED ON PLAN & PROFILE DRAWINGS.
3. SEE SPECIFICATIONS FOR APPROPRIATE MODEL ACCORDING TO PIPE DIAMETER OR PIPE MANUFACTURER RECOMMENDATIONS.

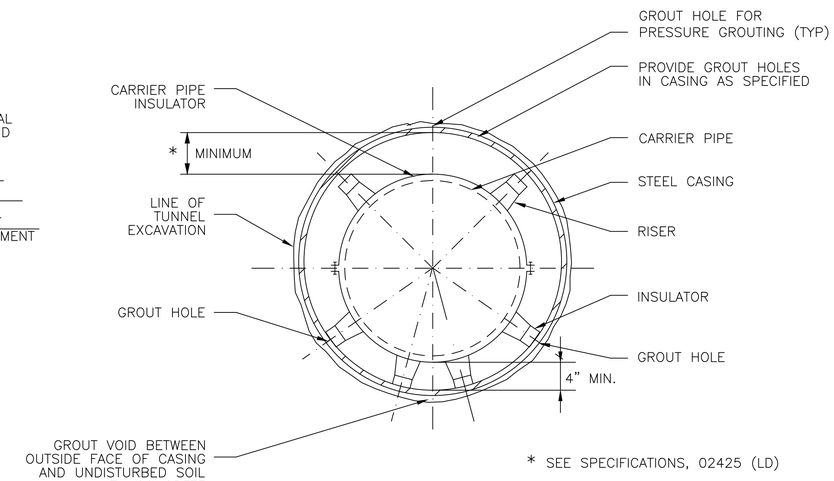

SECTION A–A

NOTE
1. THE ANNULAR SPACE IN ALL TUNNELS IN PPCA IS TO BE GROUTED

2 TUNNEL DETAIL FOR CASING W/ STEEL CARRIER PIPE AND CASING INSULATOR

(FOR WATER MAINS 24 INCHES IN DIAMETER AND SMALLER)

MINIMUM TUNNEL LINER / CASING SIZES AND THICKNESS

LOCATION	WATER MAIN DIA.	PIPE MATERIAL	(1) NOMINAL DIAMETER (CASING O.D.) / WALL THICKNESS (IN.)		
			2–FLANGE (2) LINER PLATE	4–FLANGE LINER PLATE	STEEL CASING

NOTES:

1. DIAMETER OF LINER PLATE IS AT NEUTRAL AXIS.
2. LINER PLATE IS TWO FLANGE AND NOMINALLY 2–INCH CORRUGATION BY 6–INCH PROFILE.

STANDARD LDWL TUNNEL & CASING DETAILS

NO SCALE

XX

NOTE:

SHOULD CONTRACTOR DESIRE TO USE VALVES IN A THROTTLED POSITION FOR FILLING OF LINE SEGMENTS, CONTRACTOR IS CAUTIONED TO OBSERVE RECOMMENDATIONS OF VALVE MANUFACTURER IN ORDER TO PRECLUDE DAMAGE ASSOCIATED WITH THIS MODE OF OPERATION.

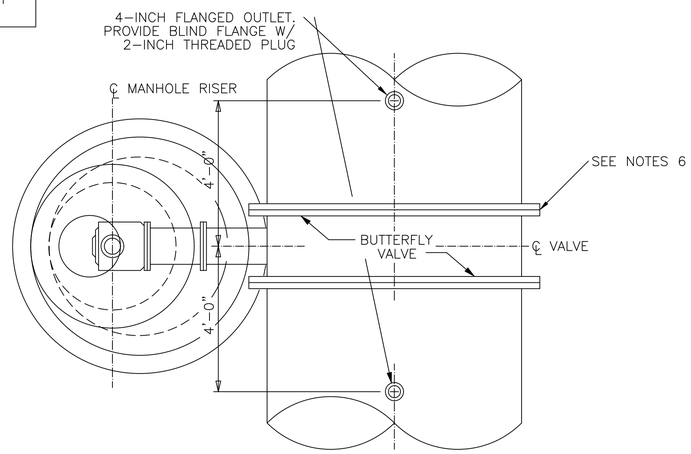

PLAN

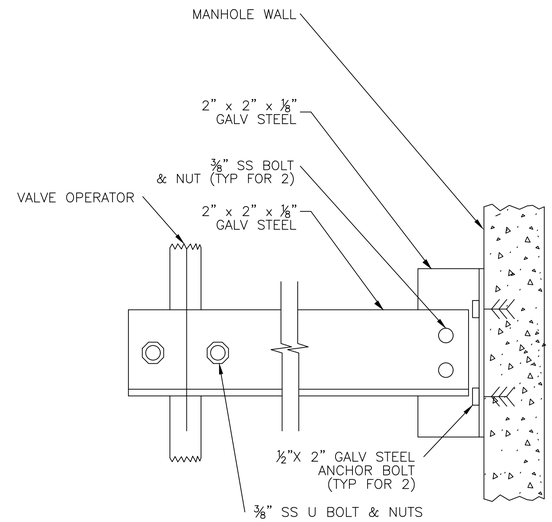

2 VALVE OPERATOR SUPPORT

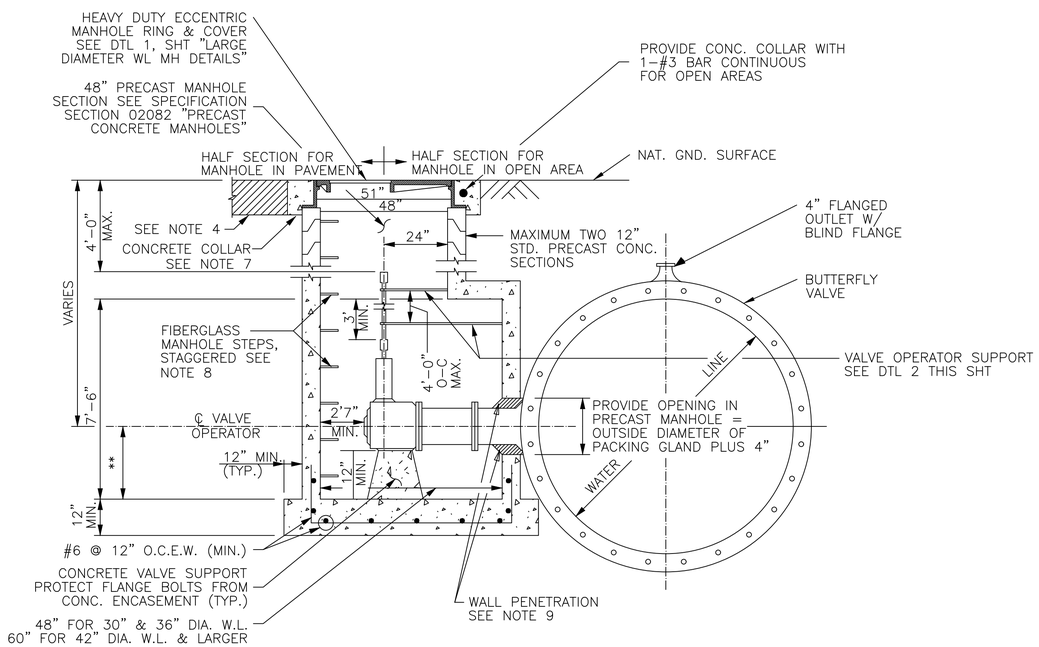

** PROVIDE A MINIMUM CLEARANCE OF 6" BETWEEN THE FOUNDATION OF OPERATOR AND THE FLANGE OF THE WATERLINE

ELEVATION

1 OPERATOR MANHOLE DETAILS FOR BUTTERFLY VALVES

(FOR WATER LINES 24-INCHES TO 96-INCH IN DIAMETER)

NOTES:

1. PROVIDE RAMNEK OR APPROVED EQUAL BETWEEN PRECAST SEGMENTS OF THE MANHOLE.
2. PLACE MANHOLE ON NEW COMPACTED (95% S. P. D.) BOTTOM IN ACCORDANCE WITH SPECIFICATION 02316.
3. 2" OPERATING NUT ON LARGE DIAMETER BUTTERFLY VALVES SHALL TURN CLOCKWISE TO OPEN VALVE. ABOVE-GROUND AND PLANT VALVES SHALL OPEN COUNTERCLOCKWISE.
4. FOR PAVEMENT REPAIR, SEE "EXCAVATION, BEDDING, AND BACKFILL DETAIL".
5. FOR MANHOLES DEEPER THAN 20 FEET, PROVIDE SAFETY CLIMBING RAIL (SAF-T-CLIMB OR EQUAL)
6. FOR JOINT BONDING DETAILS AT ISOLATION/BUTTERFLY VALVES SEE CATHODIC PROTECTION DETAILS FOR JOINT BONDING SHEETS.
7. FOR CONCRETE COLLAR SEE "LARGE DIAMETER WATERLINE MANHOLE DETAILS"
8. FOR FIBERGLASS MANHOLE STEPS SEE "LARGE DIAMETER WATERLINE MANHOLE DETAILS"
9. FOR WALL PENETRATION SEE "LARGE DIAMETER WATERLINE MANHOLE DETAILS"
10. ADJUST MANHOLE AND MANHOLE OPENING TO ALIGN WITH VALVE OPERATOR NUT FOR EASE OF OPERATION

STANDARD LDWL ISOLATION VALVE DETAILS

NO SCALE

XX

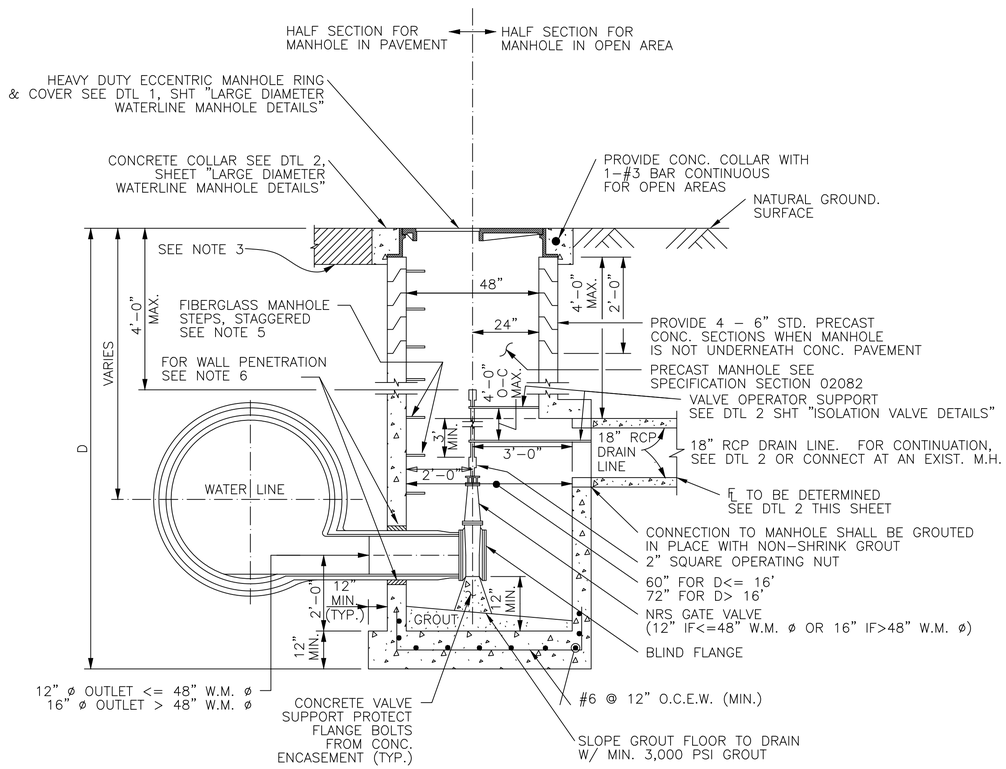

1 SERVICE MANHOLE FOR DRAINLINE VALVE CONNECTION

NOTES:

1. PROVIDE RAMNEK OR APPROVED EQUAL BETWEEN PRECAST SEGMENTS OF THE MANHOLE.
2. PLACE MANHOLE ON NEW COMPACTED (95% S. P. D.) BOTTOM IN ACCORDANCE WITH SPECIFICATION 02316.
3. FOR PAVEMENT REPAIR, SEE "EXCAVATION, BEDDING, AND BACKFILL DETAIL".
4. FOR MANHOLES DEEPER THAN 20 FEET, PROVIDE SAFETY CLIMBING RAIL (SAF-T-CLIMB OR EQUAL)
5. FOR FIBERGLASS MANHOLE STEPS, SEE "LARGE DIAMETER WATERLINE MANHOLE DETAILS"
6. FOR WALL PENETRATION SEE "LARGE DIAMETER WATERLINE MANHOLE DETAILS"
7. ADJUST MANHOLE AND MANHOLE OPENING TO ALIGN WITH VALVE OPERATOR NUT FOR EASE OF OPERATION

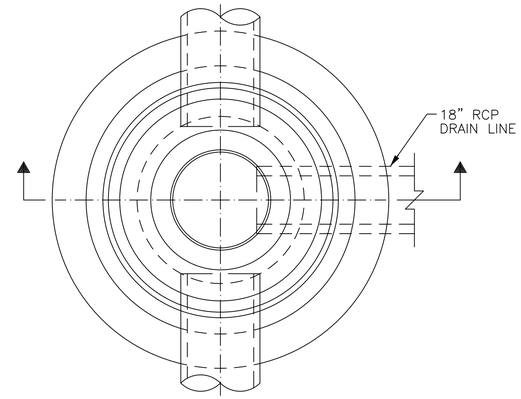

PLAN
(COVER NOT SHOWN)

TABLE
SEWER SIZE VS MANHOLE SIZE

SEWER SIZE	MANHOLE BASE DIAMETER
42"	5'-0"
36"	4'-6"
30" AND LESS	4'-0"

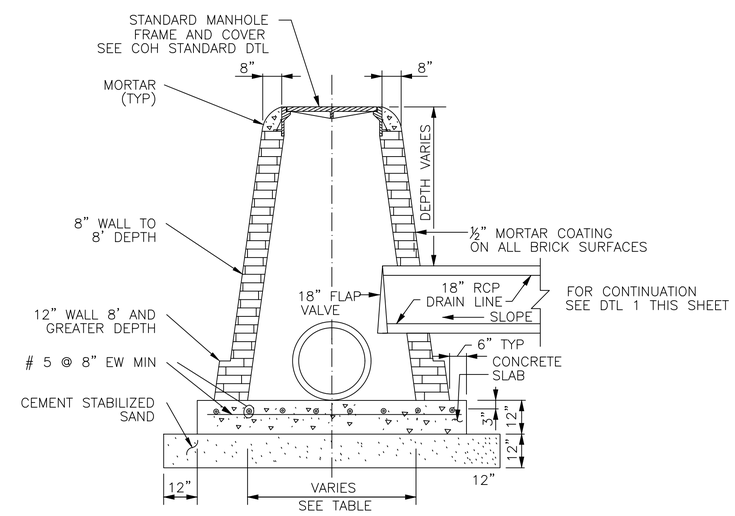

SECTION

2 DRAIN LINE CONNECTION W/ STORM SEWER MANHOLE TYPE "C"

STANDARD LDWL DRAIN LINE VALVE DETAILS

NO SCALE

XX

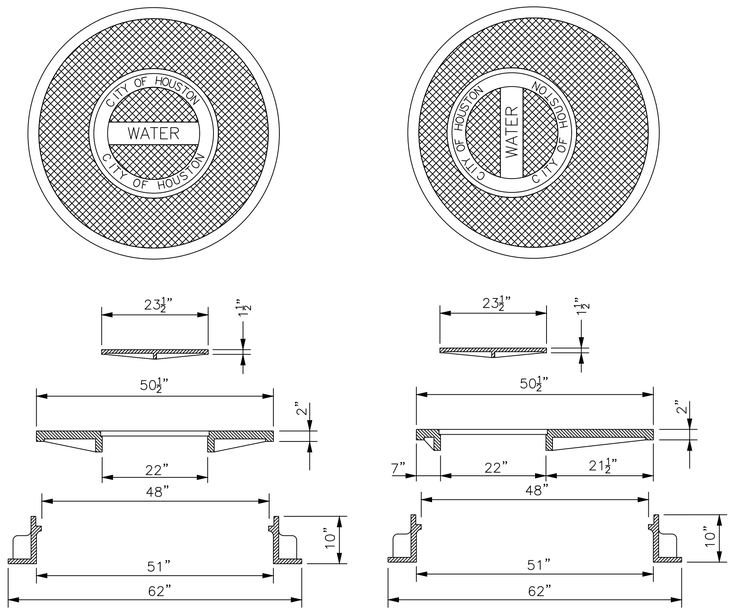

CONCENTRIC MANHOLE ACCESS LID
VULCAN V – 7048, OR EQUAL

ECCENTRIC MANHOLE ACCESS LID
VULCAN V – 7048 – 2, OR EQUAL

1 HEAVY DUTY MANHOLE RING AND COVER

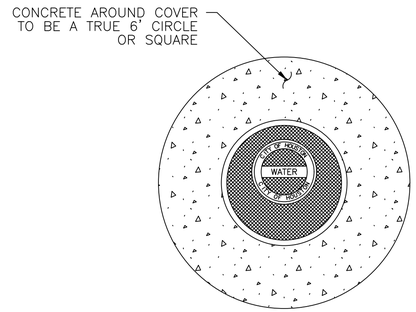

PLAN

NOTES:

1. CONSTRUCT THE FINAL TWO FEET OF THE MANHOLE AND PLACE CONCRETE WITHIN BLOCKOUT AFTER THE STREET PAVEMENT HAS BEEN INSTALLED.

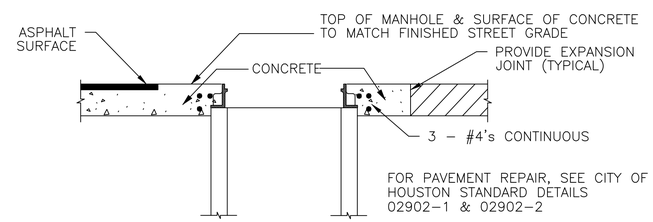

SECTION

2 MANHOLE CONCRETE COLLAR DETAIL

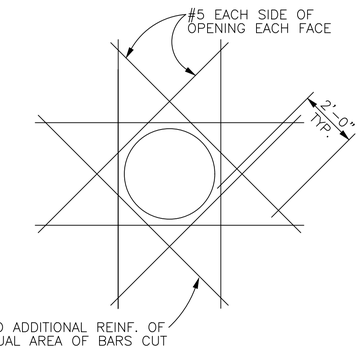

3 SERVICE MANHOLE REINFORCEMENT DETAIL

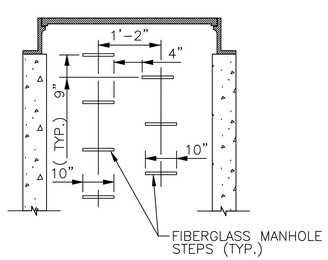

NOTES – MANHOLE STEPS:

1. PROVIDE MODEL PS1–PF STEPS AS MANUFACTURED BY M.A. INDUSTRIES INC. OR APPROVED EQUAL.
2. BOTTOM MANHOLE STEP SHALL BE NO HIGHER THAN 12" ABOVE MANHOLE INVERT.

4 MANHOLE STEP DETAIL

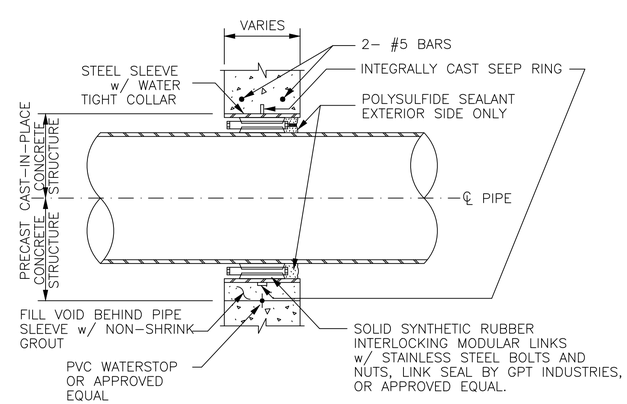

5 TYPICAL WALL PENETRATION DETAIL

STANDARD LDWL
MANHOLE DETAILS

NO SCALE

XX

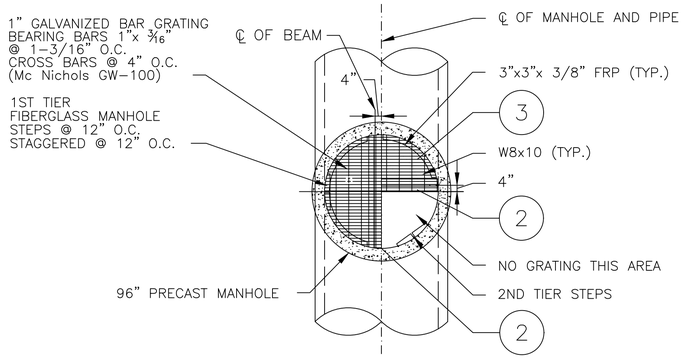

PLAN VIEW OF LANDING
(W/GRATING SHOWN)

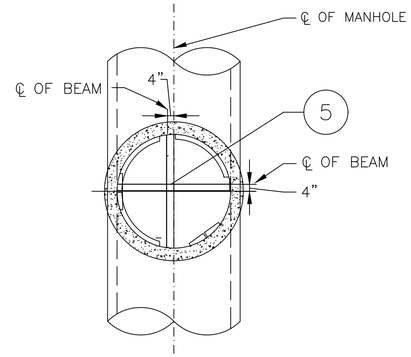

PLAN VIEW OF LANDING
(W/O GRATING SHOWN)

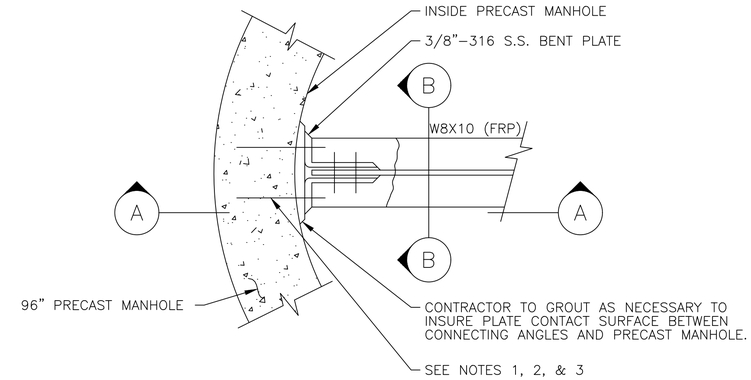

2 BEAM CONNECTION DETAIL
NO SCALE

NOTE:

1. ALL STEEL TO BE GRADE 40.
2. ALL CONCRETE TO BE CLASS "A".
3. COORDINATE THE LOCATION AND TYPE JOINTS BETWEN OFFSET BOX AND PRECAST SECTIONS.
4. PROVIDE RAMNEK OR APPROVED EQUAL BETWEEN PRECAST SEGMENTS OF THE MANHOLE.

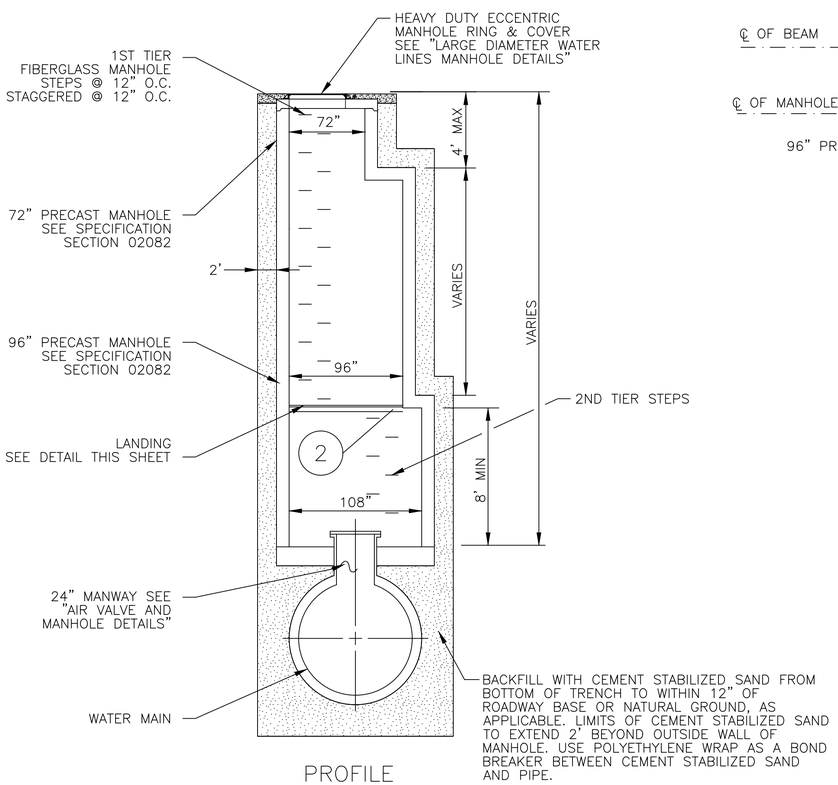

PROFILE

1 EXTRA DEPTH – ACCESS MANHOLE
(SEE PLANS FOR LOCATION)
NO SCALE

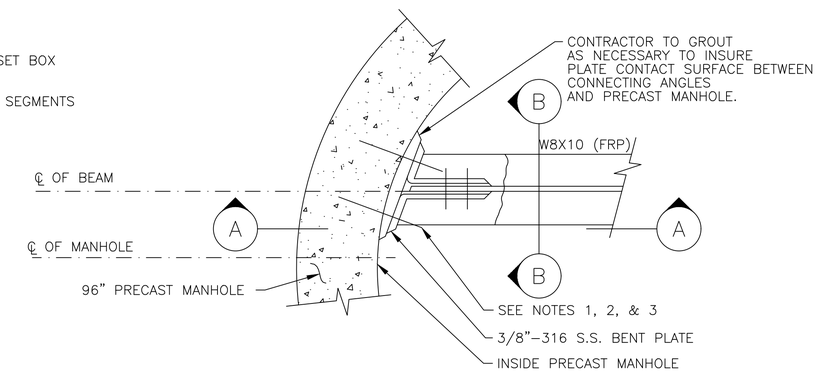

3 BEAM CONNECTION DETAIL
NO SCALE

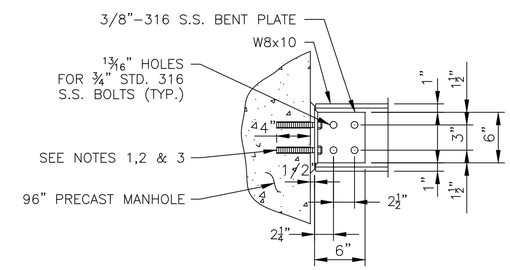

A SECTION
NO SCALE

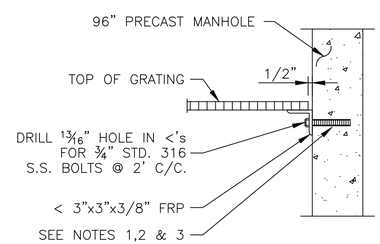

4 ANGLE CONNECTION DETAIL
NO SCALE

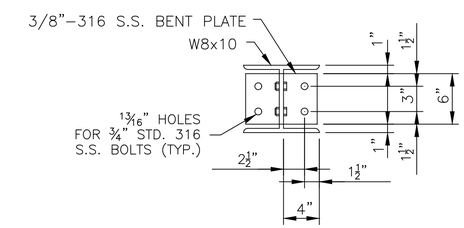

B SECTION B
NO SCALE

NOTES:

1. CONTRACTOR TO DRILL 1¼" DIAMETER HOLES 4" DEEP, INTO PRECAST MANHOLE FOR ¾" DIAMETER ANCHOR BOLTS.
2. GROUT IN ¾" DIAMETER ANCHOR BOLTS WITH GRUTEM 435 AS MANUFACTURED BY I.W. INDUSTRIES, OR APPROVED EQUAL, MANUFACTURERS INSTRUCTIONS IN THE USE OF ALL MATERIALS SPECIFIED SHALL BE FOLLOWED IN STRICT ACCORDANCE.
3. ANCHOR BOLTS SHALL BE ¾" DIAMETER x 6" LONG 316 S.S. ALL THREAD BOLTS WITH 2" PROJECTION.

STANDARD LDWL
EXTRA DEPTH MANHOLE
DETAILS

NO SCALE

XX

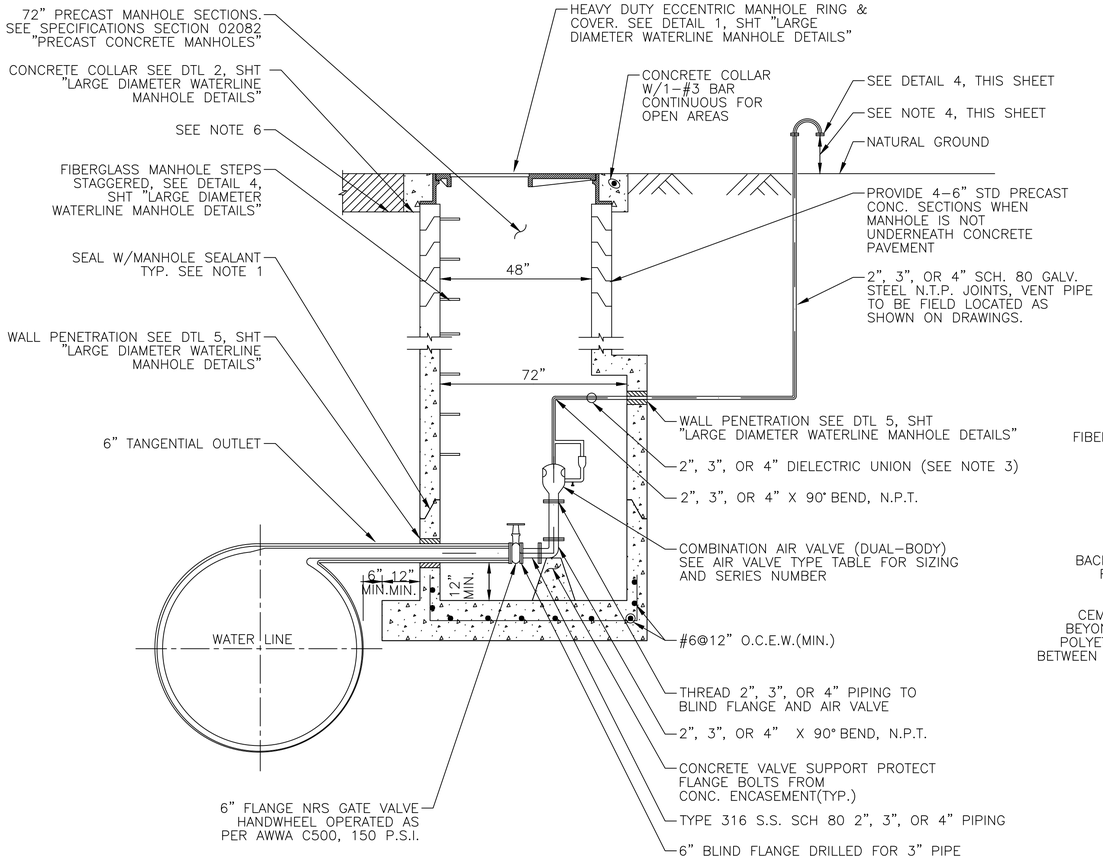

1 LOW PROFILE AIR VALVE ASSEMBLY

(FOR WATER LINES 36-INCH TO 90-INCH DIAMETER)

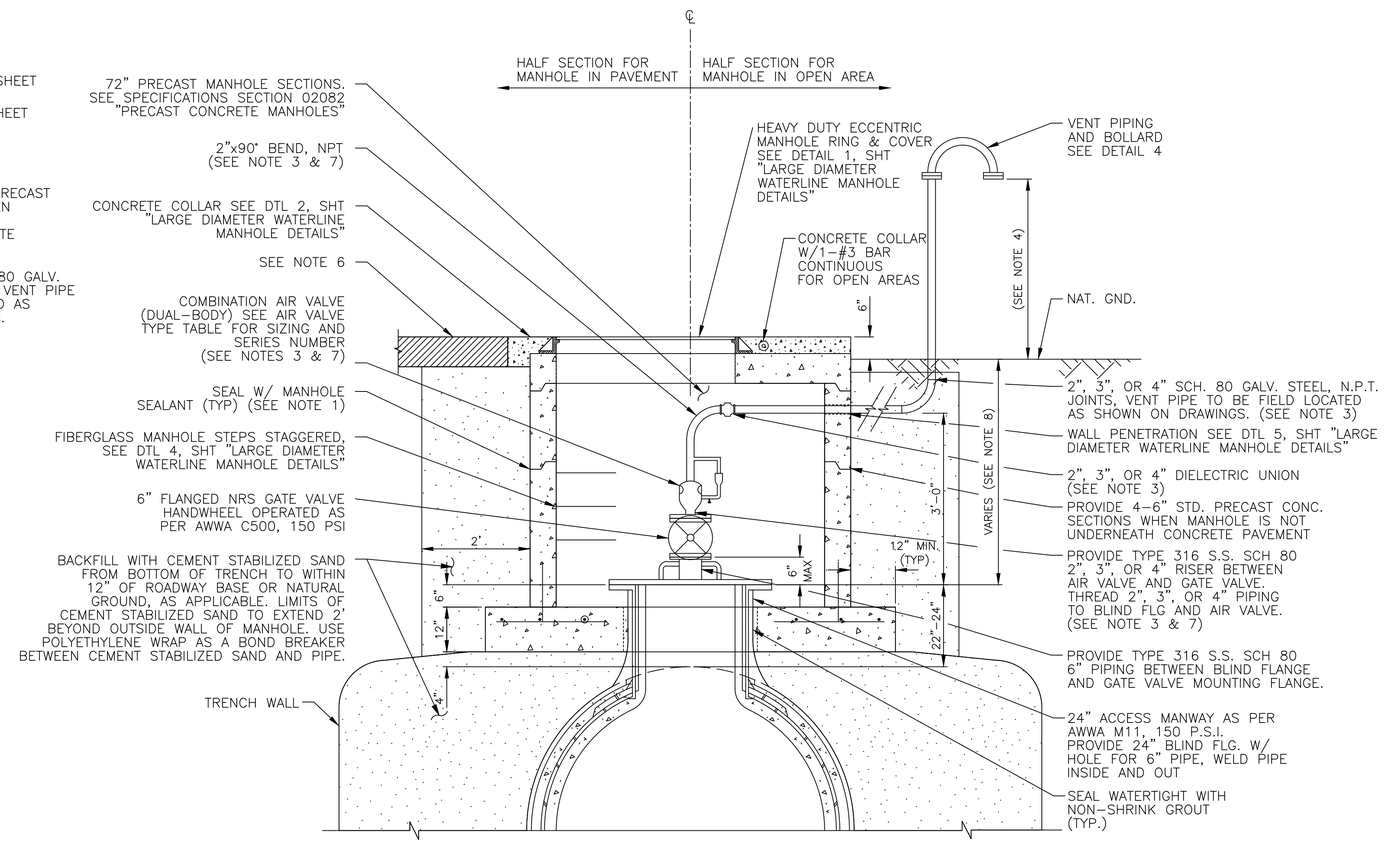

2 AIR VALVE ASSEMBLY WITH ACCESS MANWAY IN SERVICE MANHOLE

(FOR WATER LINES 36-INCH TO 90-INCH DIAMETER)

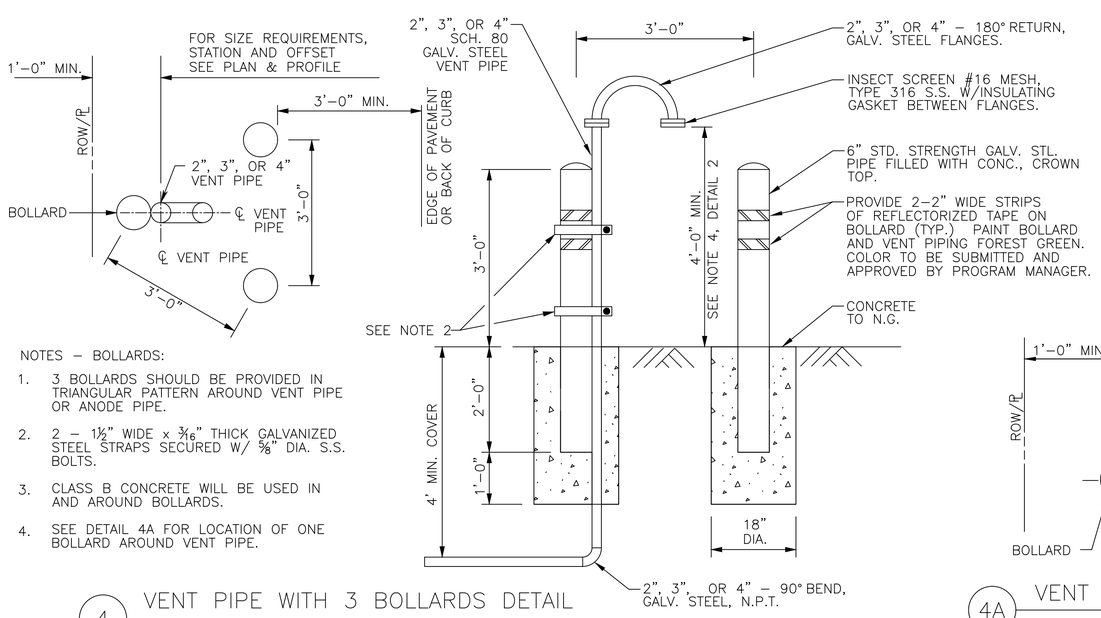

NOTES - BOLLARDS:

1. 3 BOLLARDS SHOULD BE PROVIDED IN TRIANGULAR PATTERN AROUND VENT PIPE OR ANODE PIPE.
2. 2 - 1½" WIDE x 3/16" THICK GALVANIZED STEEL STRAPS SECURED W/ ⅝" DIA. S.S. BOLTS.
3. CLASS B CONCRETE WILL BE USED IN AND AROUND BOLLARDS.
4. SEE DETAIL 4A FOR LOCATION OF ONE BOLLARD AROUND VENT PIPE.

4 VENT PIPE WITH 3 BOLLARDS DETAIL

		VACUUM (AI/VR)		AIR RELEASE		
WATER MAIN DIAMETER	MANUFACTURER (1)	SERIES	ORIFICE SIZE	SERIES	INLET SIZE (NPT)	ORIFICE SIZE (2)
>=36" <=96"	APCO	1500C		200A	1"	
	CLAVAL	38VB		34AR-C	1"	
	PRATT	WAVVB		WAR 02	1"	

(1) OR APPROVED EQUAL.

(2) MINIMUM ORIFICE SIZE REQUIRED. TO BE UPDATED FOR EACH PROJECT BASED ON TRANSIENT ANALYSIS.

3 AIR VALVE & TYPE TABLE

(FOR WATER LINES 36" TO 90" DIAMETER)

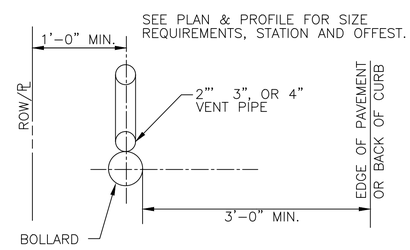

4A VENT PIPE WITH 1 BOLLARD DETAIL

NOTES:

1. PROVIDE RAM-NEK OR APPROVED EQUAL BETWEEN PRECAST SEGMENTS OF THE MANHOLE.
2. FOR MANHOLES DEEPER THAN 20 FEET, SAFETY CLIMBING RAIL MUST BE PROVIDED (SAF-T-CLIMB OR APPROVED EQUAL).
3. PIPING AND APPURTENANCES OF THE SAME DIAMETER AND CONSTRUCTED OF THE SAME MATERIAL AND CLASS.
4. VERIFY THAT LOCATION OF VENT PIPE SCREEN IS 1 FOOT ABOVE 100-YEAR FLOOD PLAIN ELEVATION OR 4 FEET ABOVE NATURAL GROUND WHICHEVER IS HIGHER.
5. REFER TO PLAN AND PROFILE SHEETS FOR LOCATIONS OF AIR VALVES.
6. FOR PAVEMENT REPAIR, SEE SHEET "EXCAVATION, BEDDING, AND BACKFILL DETAILS".
7. PROVIDE AN APPROVED PETROLATUM BASED TAPE ENCAPSULATING ALL BOLTS IN ACCESS MANHOLE.
8. IF DEPTH OF COVER IS LESS THAN 5', USE "LOW PROFILE AIR VALVE ASSEMBLY DETAIL"

STANDARD LDWL
AIR VALVE & MANHOLE DETAILS
(SHEET 1 OF 2)

NO SCALE

XX

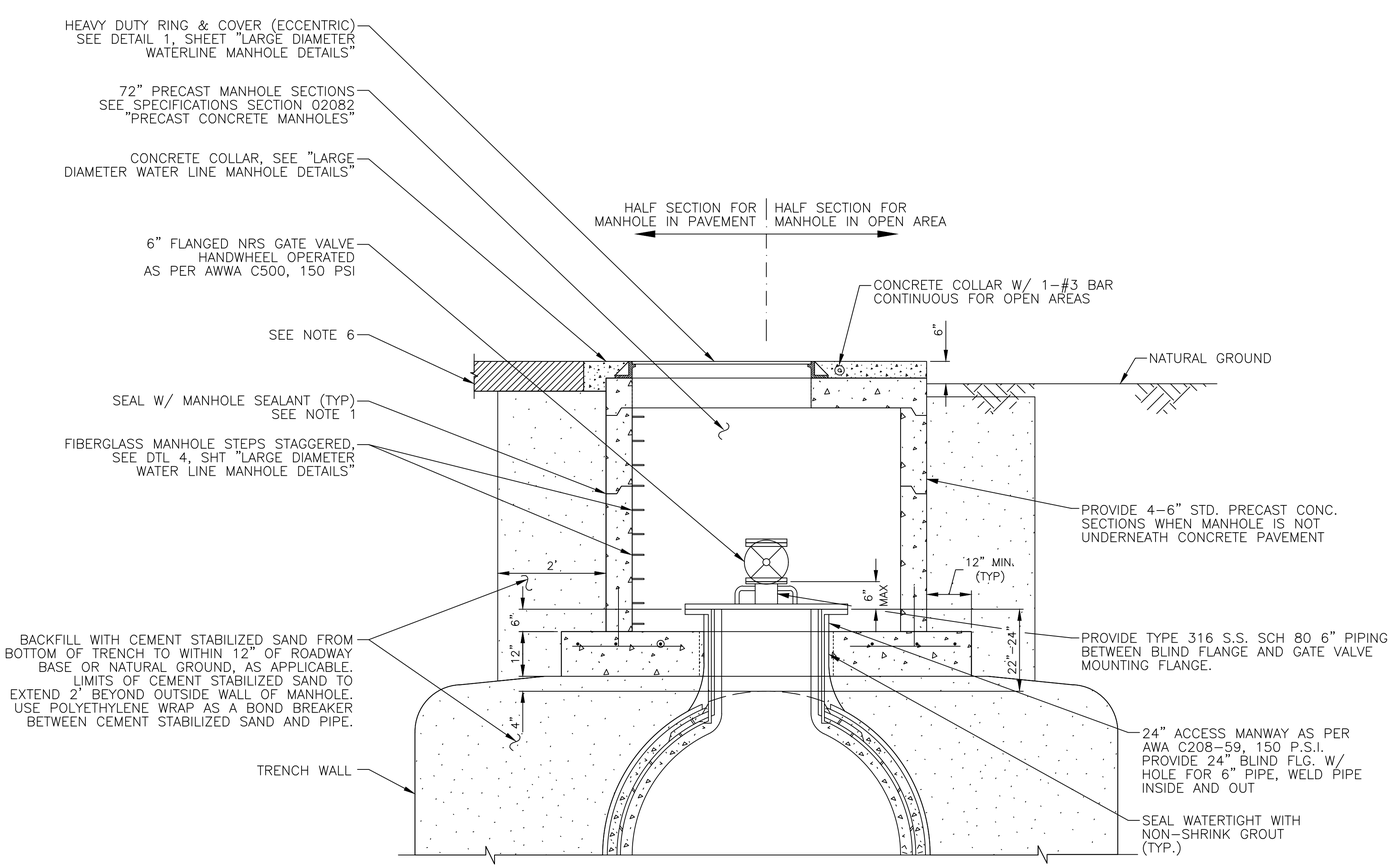

1 ACCESS MANWAY IN ACCESS MANHOLE

(FOR WATER LINES 36-INCH TO 90-INCH DIAMETER)

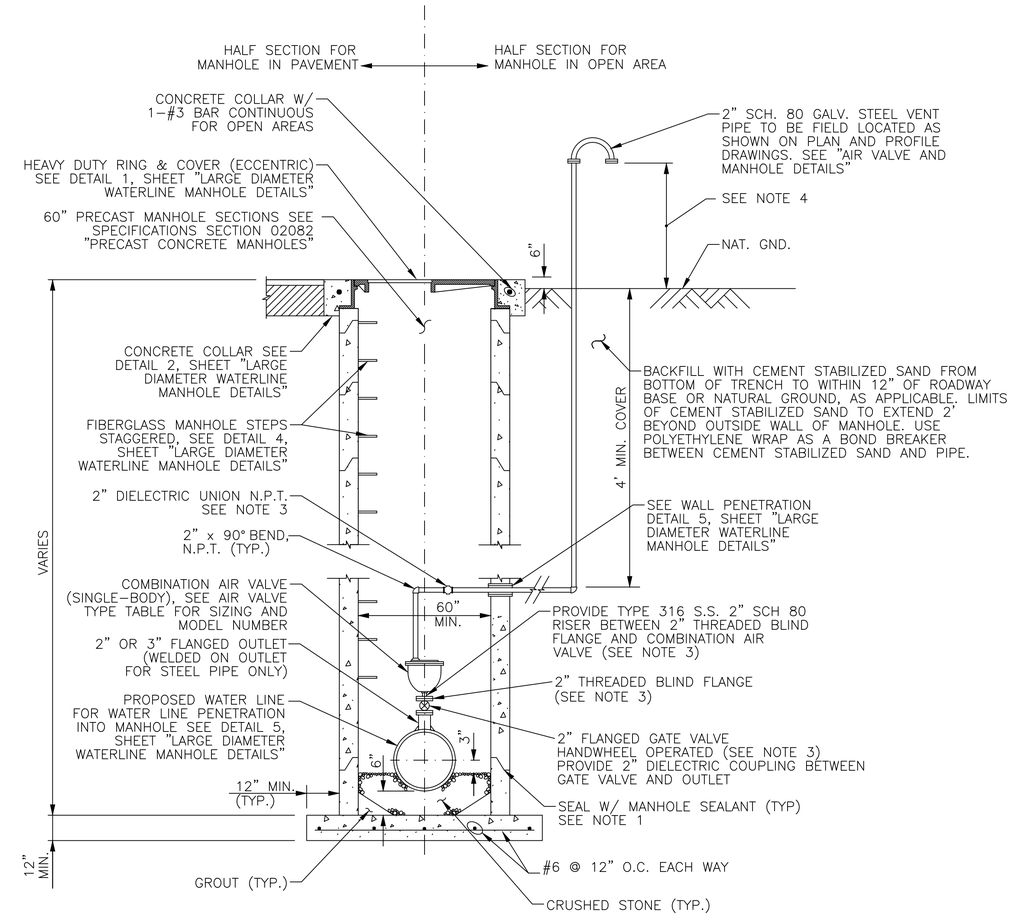

2 COMBINATION AIR VALVE ASSEMBLY IN SERVICE MANHOLE

(FOR WATER LINES SMALLER THAN 36-INCHES DIAMETER)

		VACUUM (AI/VR)		AIR RELEASE		
WATER MAIN DIAMETER	MANUFACTURER (1)	SERIES	ORIFICE SIZE	SERIES	INLET SIZE (NPT)	ORIFICE SIZE (2)
>=36" <=96"	APCO	1500C		200A	1"	
	CLAVAL	38VB		34AR-C	1"	
	PRATT	WAVVB		WAR 02	1"	

AIR VALVE & TYPE TABLE

(FOR WATER LINES 36" TO 90" DIAMETER)

(1) OR APPROVED EQUAL.

(2) MINIMUM ORIFICE SIZE REQUIRED. TO BE UPDATED FOR EACH PROJECT BASED ON TRANSIENT ANALYSIS.

		VACUUM (AI/VR)	
WATER MAIN DIAMETER	MANUFACTURER (1)	SERIES	ORIFICE SIZE
<=36"	APCO	140C	
	CLAVAL	36	
	PRATT	WCV 01	

AIR VALVE & TYPE TABLE

(FOR WATER LINES SMALLER THAN 36" DIAMETER)

NOTES:

1. PROVIDE RAM-NEK OR APPROVED EQUAL BETWEEN PRECAST SEGMENTS OF THE MANHOLE.
2. FOR MANHOLES DEEPER THAN 20 FEET, SAFETY CLIMBING RAIL MUST BE PROVIDED (SAF-T-CLIMB OR APPROVED EQUAL).
3. PIPING AND APPURTENANCES OF THE SAME DIAMETER AND CONSTRUCTED OF THE SAME MATERIAL AND CLASS.
4. VERIFY THAT LOCATION OF VENT PIPE SCREEN IS 1 FOOT ABOVE 100-YEAR FLOOD PLAIN ELEVATION OR 4 FEET ABOVE NATURAL GROUND WHICHEVER IS HIGHER.
5. REFER TO PLAN AND PROFILE SHEETS FOR LOCATIONS OF AIR VALVES.
6. FOR PAVEMENT REPAIR, SEE SHEET "EXCAVATION, BEDDING, BACKFILL AND PAVEMENT REPAIR DETAILS".
7. PROVIDE AN APPROVED PETROLATUM BASED TAPE ENCAPSULATING ALL BOLTS IN ACCESS MANHOLE.

STANDARD LDWL
AIR VALVE & MANHOLE DETAILS
(SHEET 2 OF 2)

NO SCALE

XX

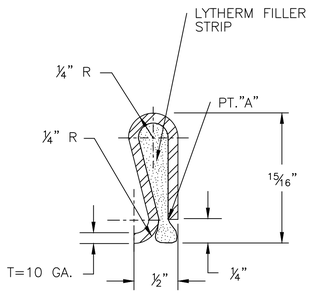

NOTES:

1. STEEL BONDING CLIP:
   MATERIAL SPECIFICATION --- ASTM A366 (COMMERCIAL QUALITY)
   CUT LENGTH ---------- 2½" ± 1/16"
   WIDTH---------- 1¼" ± 1/16"
2. LYTHERM FILLER STRIP TO BE 1" x 1½" WIDE TO OVERLAP SIDES OF CLIP.
3. CRIMP JUMPER OVER FILLER AT "A" TO COMPRESS FILLER CLOSE AT PT. "A" AS MUCH AS POSSIBLE WITHOUT CUTTING FILLER PAD.
4. THREE BONDING CLIPS ARE REQUIRED PER GASKETED JOINT (TYPICAL).
5. BONDING NOT REQUIRED FOR WELDED JOINTS.

1 STEEL BONDING CLIP DETAIL

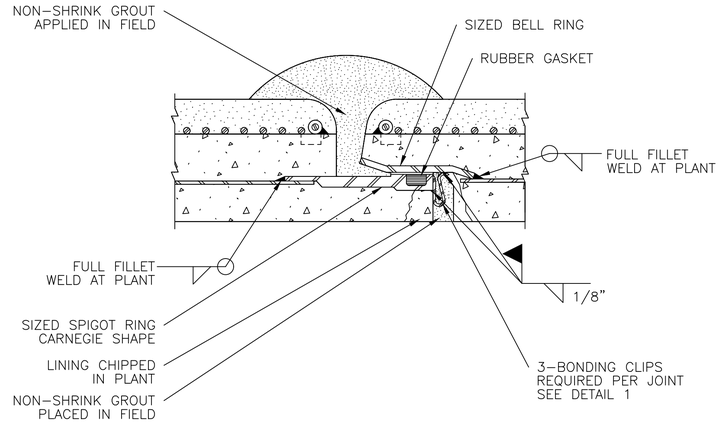

2 BONDED JOINT – EMBEDDED CYLINDER PIPE

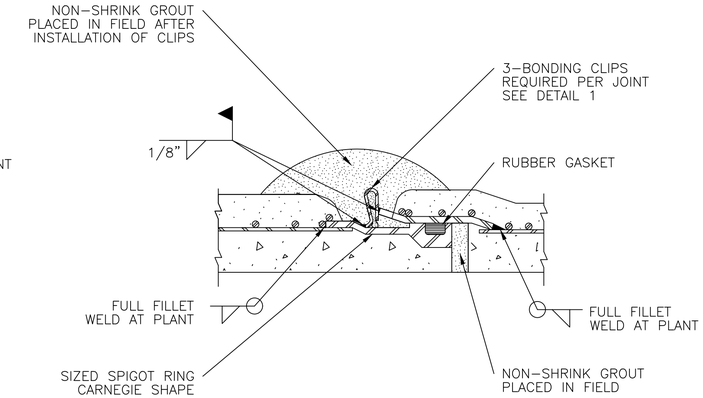

3 BONDED JOINT – BAR WRAPPED CYLINDER PIPE

(SIMILAR FOR LINED CYLINDER PIPE)

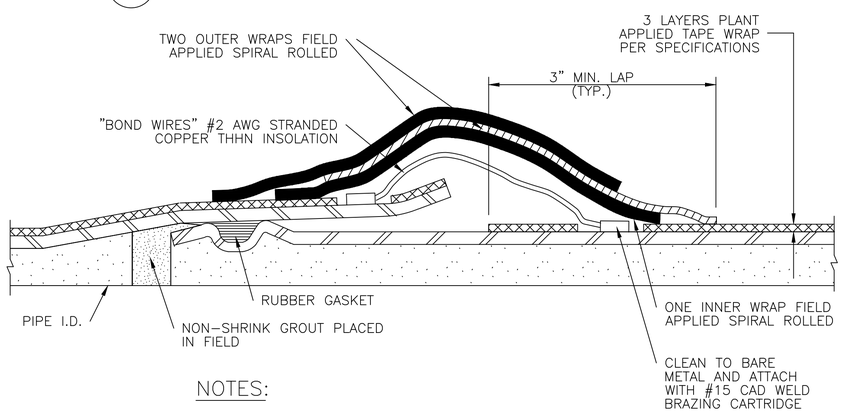

NOTES:

1. STEEL BONDING CLIP IS OPTIONAL TO BOND WIRE.
2. A MINIMUM OF TWO BOND WIRES OR THREE BONDING CLIPS ARE REQUIRED FOR RUBBER GASKETED STEEL PIPE. CLIPS ARE TO BE PROVIDED IN ACCORDANCE WITH DETAILS.
3. BONDING NOT REQUIRED FOR WELDED JOINTS.

4 O-RING STEEL PIPE JOINT DETAIL

(CEMENT MORTAR LINED & TAPE WRAPPED SHOWN. FLEXIBLE LINING SIMILAR)

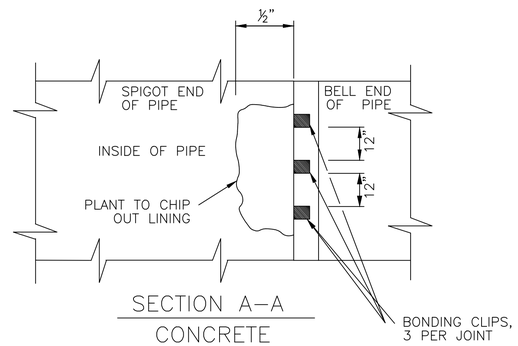

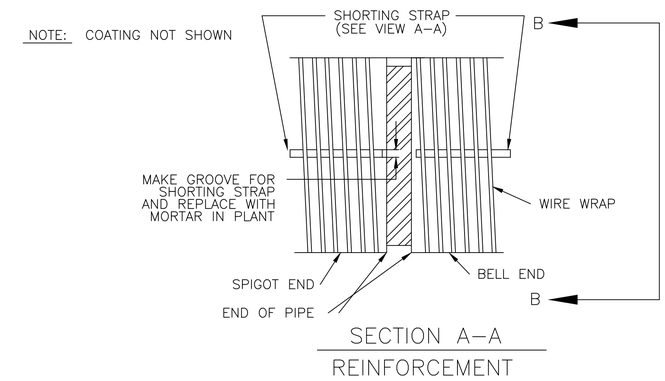

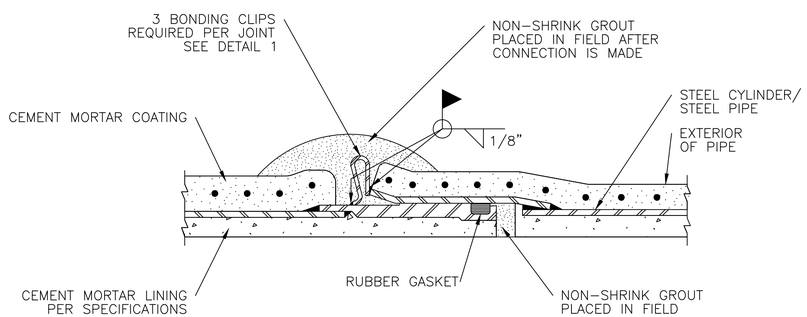

5 BONDED JOINT – MORTAR COATED STEEL PIPE

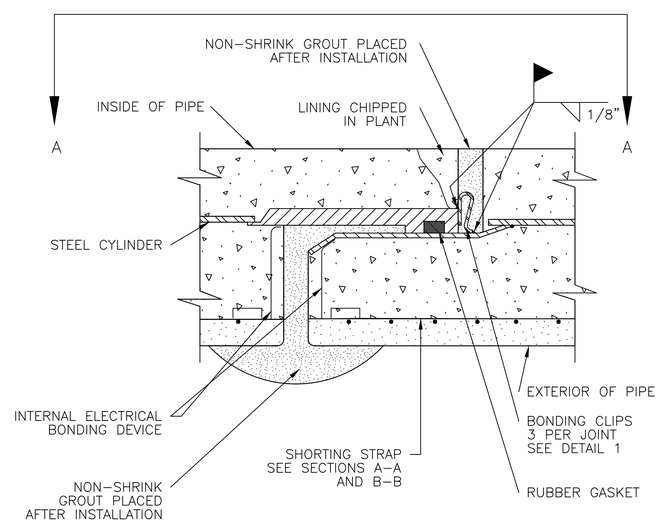

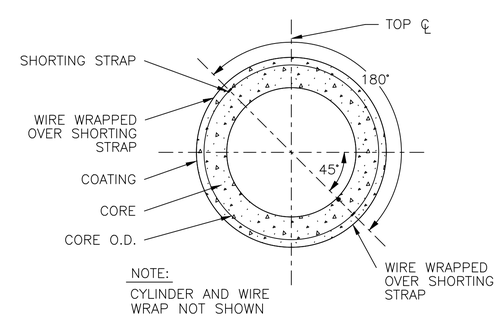

NOTE:

PLACE BONDING CLIPS IN INTERIOR JOINT RECESS AS SHOWN. WELD CLIPS TO BELL AND SPIGOT USING ⅛" FILLET WELD. REMOVE SLAG FROM WELD AND FILL RECESS WITH CEMENT MORTAR, COVERING ALL EXPOSED STEEL.

6 ELECTRICAL CONTINUITY BONDING OF EMBEDDED CYLINDER PIPE

STANDARD LDWL
CATHODIC PROTECTION DETAILS
FOR JOINT BONDING
(SHEET 1 OF 2)

NO SCALE

XX

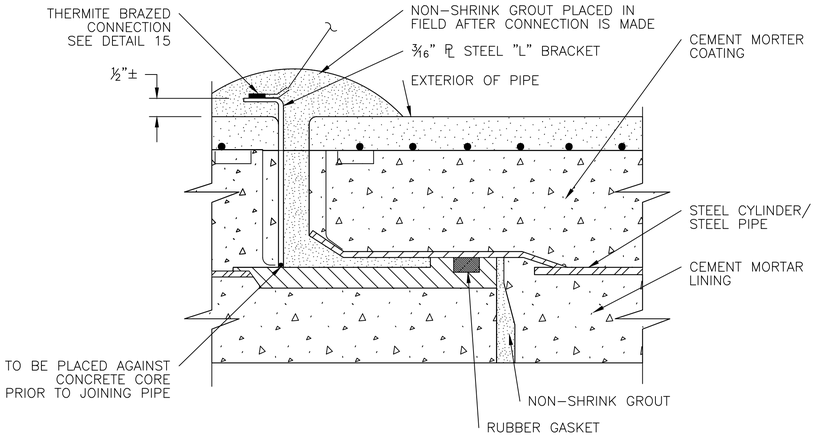

7 TEST LEAD CONNECTION DETAIL

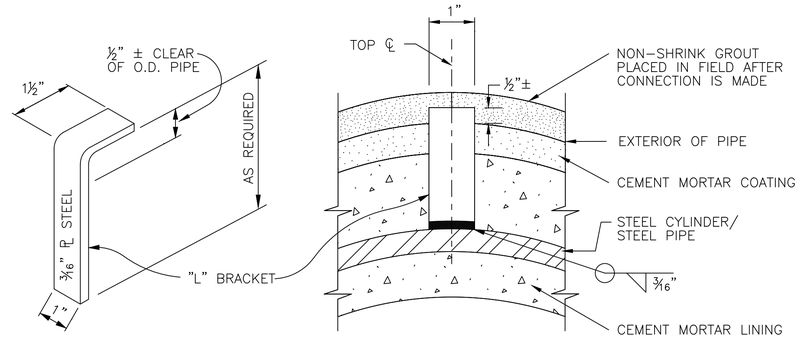

SPIG VIEW

8 "L" BRACKET DETAIL

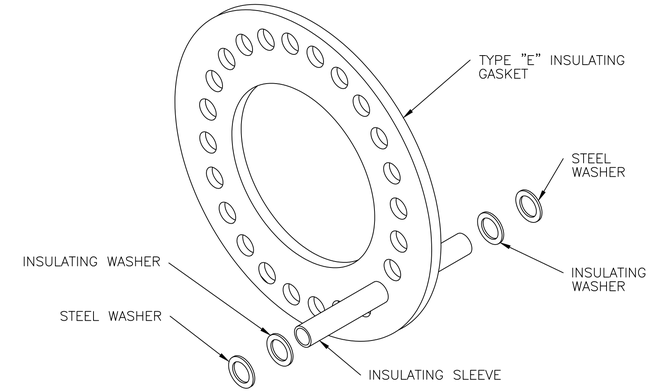

INSULATING SLEEVE AND ACCESSORIES

9 ISOLATION FLANGE ASSEMBLY

NOTE: SEE AWWA M11 FOR FLANGE BOLT TIGHTENING SEQUENCE

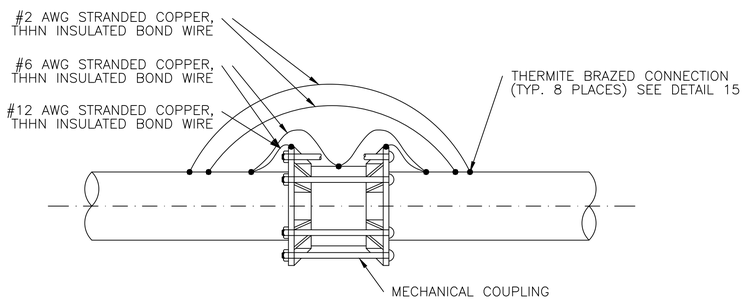

10 MECHANICAL COUPLING BOND DETAIL

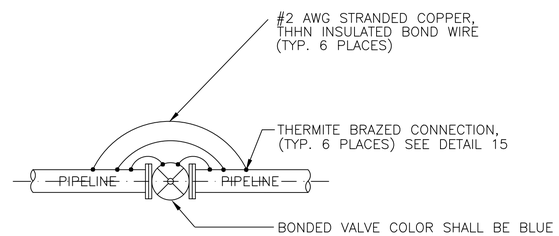

11 VALVE BONDING ARRANGEMENT

MAINLINE WITH CATHODIC PROTECTION

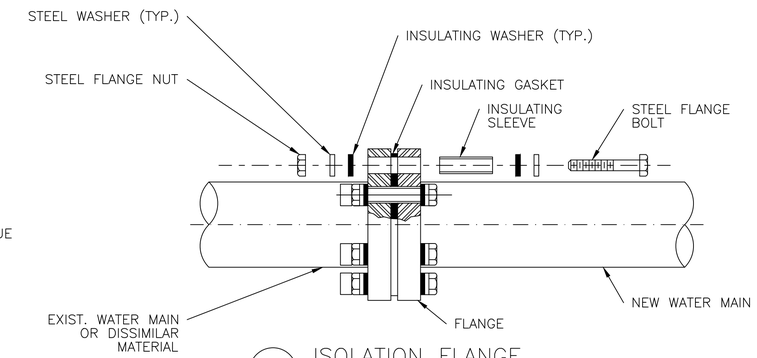

12 ISOLATION FLANGE

NOTES:

1. DETAILS SHOW BONDING ARRANGEMENTS ONLY. SEE JOINT DETAIL FOR PIPE JOINT REQUIREMENTS.

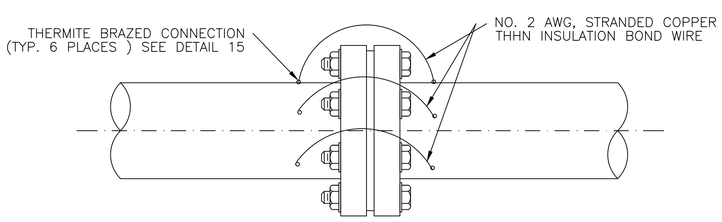

13 ELECTRICAL BONDING ACROSS FLANGE

NOTE: BOND WIRES SHALL BE PLACED A MINIMUM OF 6" APART.

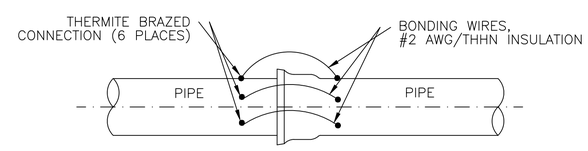

NOTE:
BOND WIRES SHALL BE PLACED A MINIMUM OF 6" APART.

14 BELL & SPIGOT BONDING ARRANGEMENT

DUCTILE IRON PIPE

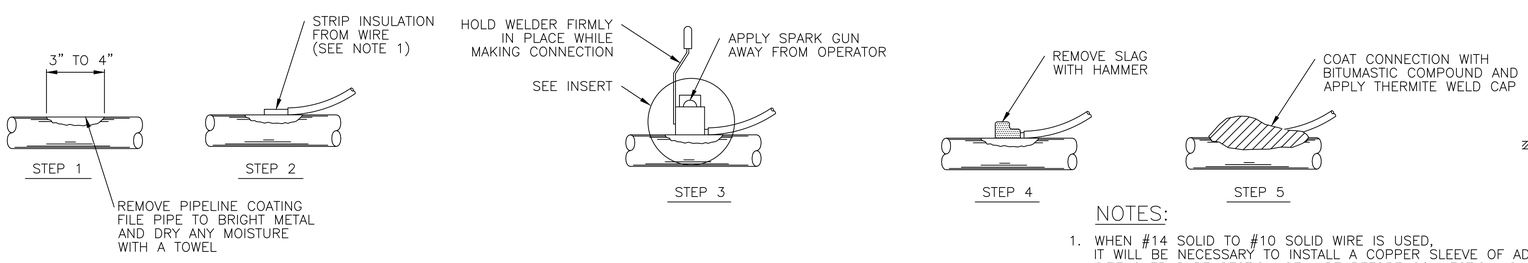

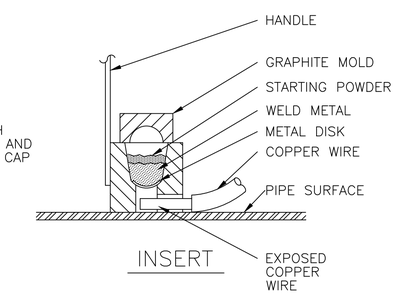

INSERT

15 THERMITE BRAZED CONNECTION DETAIL

NOTES:

1. WHEN #14 SOLID TO #10 SOLID WIRE IS USED, IT WILL BE NECESSARY TO INSTALL A COPPER SLEEVE OF ADEQUATE SIZE OVER BARE SECTION OF WIRE BEFORE CONNECTION IS ATTEMPTED.
2. THERMITE WELD PROCEDURES SIMILAR FOR "L" BRACKETS.
3. REPAIR ALL DAMAGE TO COATING AND LINING IN ACCORDANCE WITH MFG. RECOMMENDATIONS.

STANDARD LDWL
CATHODIC PROTECTION DETAILS
FOR JOINT BONDING
(SHEET 2 OF 2)

NO SCALE

XX

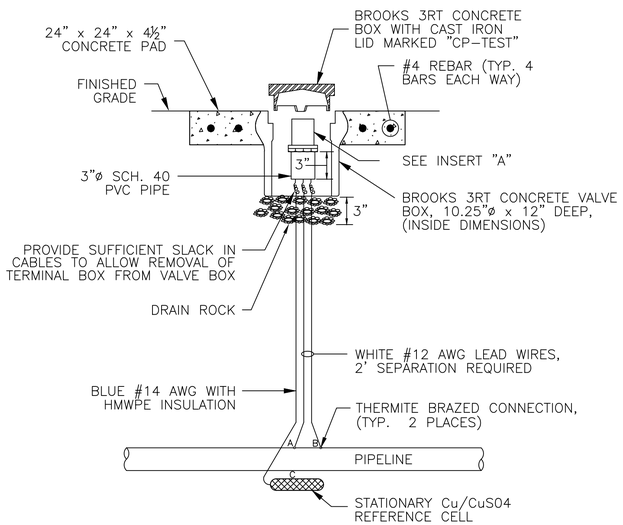

1 FLUSH MOUNTED POTENTIAL TEST STATION

WIRE CODING:
* WIRES A & B ARE WHITE, WIRE C IS BLUE
* WIRES A & B ARE #12 AWG TW SOLID SINGLE CONDUCTOR WIRE
* WIRES C IS #14 AWG WITH HMWPE INSULATION

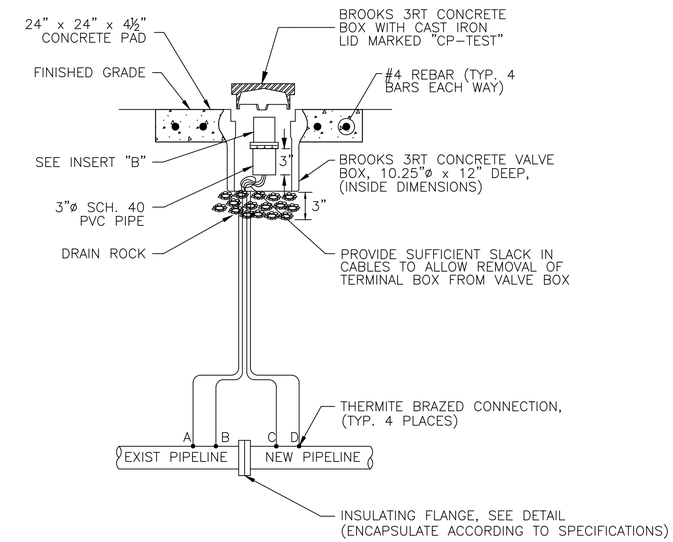

2 FLUSH MOUNTED FLANGE ISOLATION TEST STATION

WIRE CODING:
* WIRES A & B ARE BLACK, WIRES C & D ARE WHITE
* WIRES A & D ARE #12 AWG TW SOLID SINGLE CONDUCTOR WIRE
* WIRES B & C ARE #6 AWG TW STRANDED SINGLE CONDUCTOR
* BLACK WIRES ATTACHED TO UNPROTECTED OR EXISTING PIPE
* WHITE WIRES ATTACHED TO PROTECTED OR NEW PIPE

NOTES:

1. FOR THERMITE BRAZED CONNECTION DETAIL, SEE "CATHODIC PROTECTION DETAILS FOR JOINT BONDING, SHEET 2 OF 2, DETAIL 15".

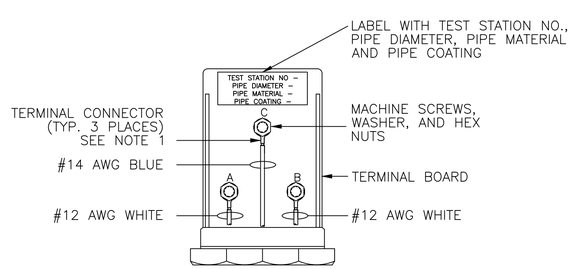

NOTES:

1. TERMINAL CONNECTORS SHALL BE RING TONGUE, BRAZED, COPPER, NON–INSULATED WITH ," ¼" STUD SIZE
   – FOR WIRE SIZE 14–10 AWG, USE THOMAS & BETTS 54101 OR APPROVED EQUAL.

INSERT "A"

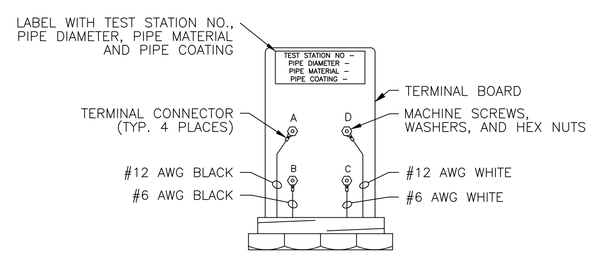

NOTES:

1. TERMINAL CONNECTORS SHALL BE RING TONGUE, BRAZED, COPPER, NON–INSULATED WITH ," ¼" STUD SIZE
   – FOR WIRE SIZE 14–10 AWG, USE THOMAS & BETTS 54101 OR APPROVED EQUAL.
   – FOR WIRE SIZE 6 AWG, USE THOMAS & BETTS 54105 OR APPROVED EQUAL.

INSERT "B"

STANDARD LDWL
CATHODIC PROTECTION DETAILS
FOR TEST STATIONS
(SHEET 1 OF 3)

NO SCALE

XX

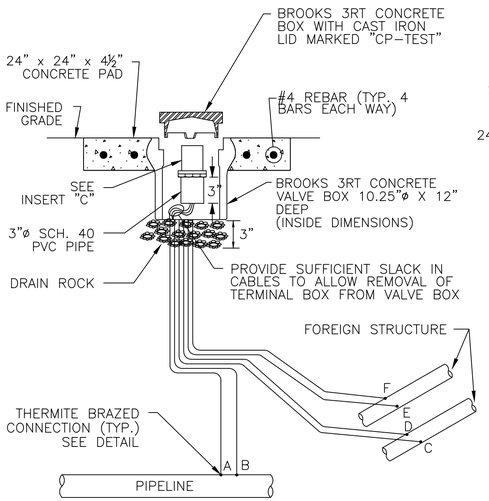

NOTES:

1. TEST STATION SHALL BE MOUNTED DIRECTLY ABOVE THE NEW WATER LINE.
2. FOR MORE THAN TWO (2) FOREIGN LINES, INSTALL A COTTBOX TYPE TEST STATION. (UP TO 20 TERMINALS)

3 FLUSH MOUNTED FOREIGN LINE TEST STATION

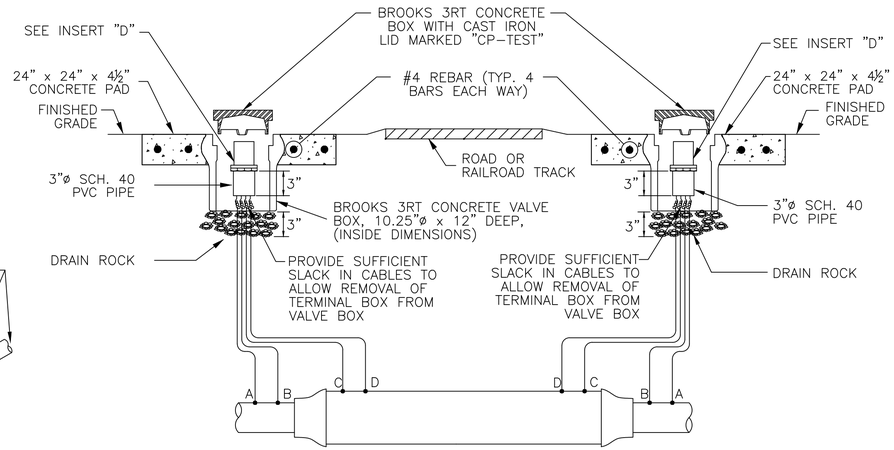

NOTES:

1. FOR PARALLEL CASED CROSSINGS, INSTALL A COTTBOX TYPE TEST STATION. (UP TO 20 TERMINALS)

4 FLUSH MOUNTED CASED CROSSING TEST STATION

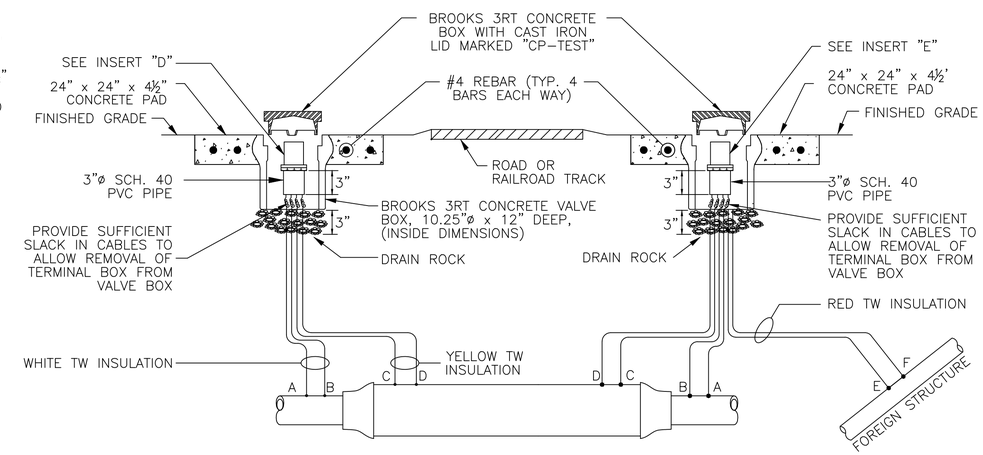

NOTES:

1. TEST STATION SHALL BE MOUNTED DIRECTLY ABOVE THE NEW WATER LINE.
2. FOR MORE THAN ONE (1) FOREIGN LINE, INSTALL A COTTBOX TYPE TEST STATION. (UP TO 20 TERMINALS)

5 FLUSH MOUNTED CASED CROSSING AND FOREIGN LINE TEST STATION

WIRING CODE:
* WIRES A & B ARE WHITE
* WIRES C, D, E & F ARE RED
* WIRES A, C, F ARE #12 AWG TW SOLID COPPER WIRE
* WIRES B, D, E ARE #6 AWG TW STRANDED COPPER WIRE
* RED WIRES ATTACHED TO FOREIGN OWNED PIPE
* WHITE WIRES ATTACHED TO NEW PIPE

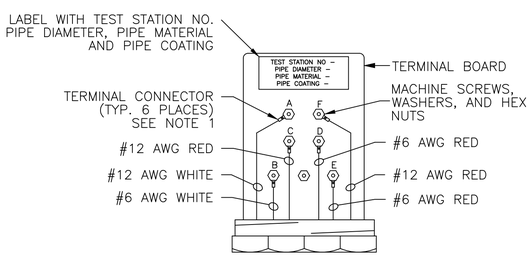

NOTES:

1. TERMINAL CONNECTORS SHALL BE RING TONGUE, BRAZED, COPPER, NON–INSULATED WITH ¼" STUD SIZE
   – FOR WIRE SIZE 14–10 AWG, USE THOMAS & BETTS 54101 OR APPROVED EQUAL.
   – FOR WIRE SIZE 6 AWG, USE THOMAS & BETTS 54105 OR APPROVED EQUAL.

INSERT "C"

WIRE CODING:
* WIRES A & B ARE WHITE, WIRES C & D ARE YELLOW
* WIRES A & D ARE #12 AWG TW SOLID SINGLE CONDUCTOR WIRE
* WIRES B & C ARE #6 AWG TW STRANDED SINGLE CONDUCTOR
* YELLOW WIRES ATTACHED TO CASING
* WHITE WIRES ATTACHED TO PROTECTED OR NEW PIPE

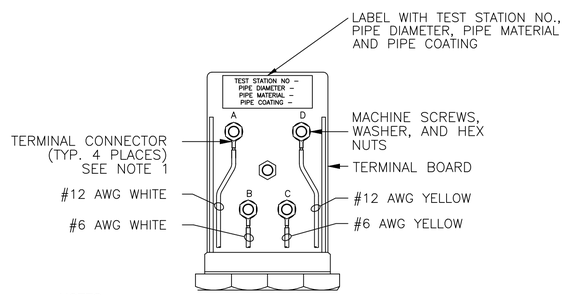

NOTES:

1. TERMINAL CONNECTORS SHALL BE RING TONGUE, BRAZED, COPPER, NON–INSULATED WITH ¼" STUD SIZE
   – FOR WIRE SIZE 14–10 AWG, USE THOMAS & BETTS 54101 OR APPROVED EQUAL.
   – FOR WIRE SIZE 6 AWG, USE THOMAS & BETTS 54105 OR APPROVED EQUAL.

INSERT "D"

WIRE CODING:
* WIRES A & B ARE WHITE, WIRES C & D ARE YELLOW
* WIRES E & F ARE RED
* WIRES A, D & F ARE #12 AWG TW SOLID SINGLE CONDUCTOR WIRE
* WIRES B, C & E ARE #6 AWG TW STRANDED SINGLE CONDUCTOR
* WHITE WIRES ATTACHED TO PROTECTED OR NEW PIPE
* YELLOW WIRES ATTACHED TO CASING
* RED WIRES ATTACHED TO FOREIGN OWNED PIPE

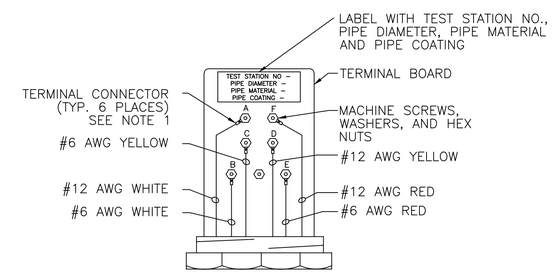

NOTES:

1. TERMINAL CONNECTORS SHALL BE RING TONGUE, BRAZED, COPPER, NON–INSULATED WITH ¼" STUD SIZE
   – FOR WIRE SIZE 14–10 AWG, USE THOMAS & BETTS 54101 OR APPROVED EQUAL.
   – FOR WIRE SIZE 6 AWG, USE THOMAS & BETTS 54105 OR APPROVED EQUAL.

INSERT "E"

STANDARD LDWL
CATHODIC PROTECTION DETAILS
FOR TEST STATIONS
(SHEET 2 OF 3)

NO SCALE

XX

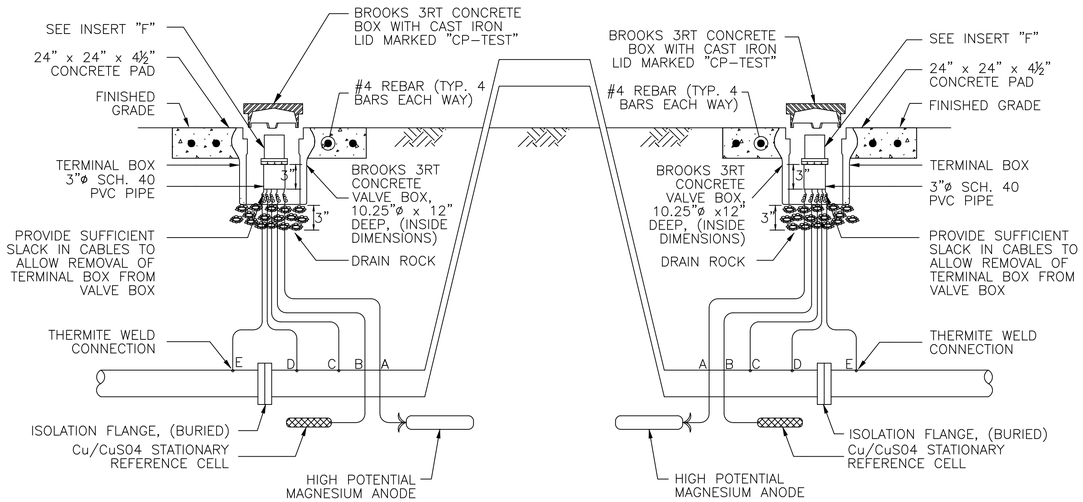

6 ABOVE GROUND CROSSING FLUSH MOUNTED FLANGE ISOLATION AND ANODE INSTALLATION TEST STATION

WIRE CODING:

* WIRES C & D ARE WHITE, WIRES E IS BLACK
* WIRES D & E ARE #12 AWG TW SOLID SINGLE CONDUCTOR WIRE
* WIRE C IS #12 AWG/HMWPE SOLID STRANDED SINGLE CONDUCTOR WIRE
* WIRE A IS GREEN #12 AWG ANODE LEAD WIRE TO 48 LB. MAGNESIUM
* WIRE B IS BLUE #14 AWG/HMWPE LEAD WIRE TO REFERENCE CELL

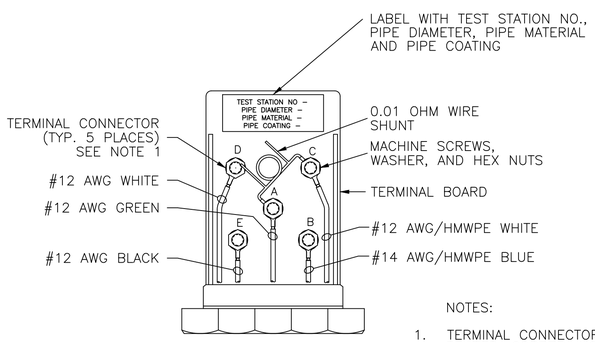

INSERT "F"

NOTES:

1. TERMINAL CONNECTORS SHALL BE RING TONGUE, BRAZED, COPPER, NON-INSULATED WITH ," ¼" STUD SIZE

   – FOR WIRE SIZE 14–10 AWG, USE THOMAS & BETTS 54101 OR APPROVED EQUAL.

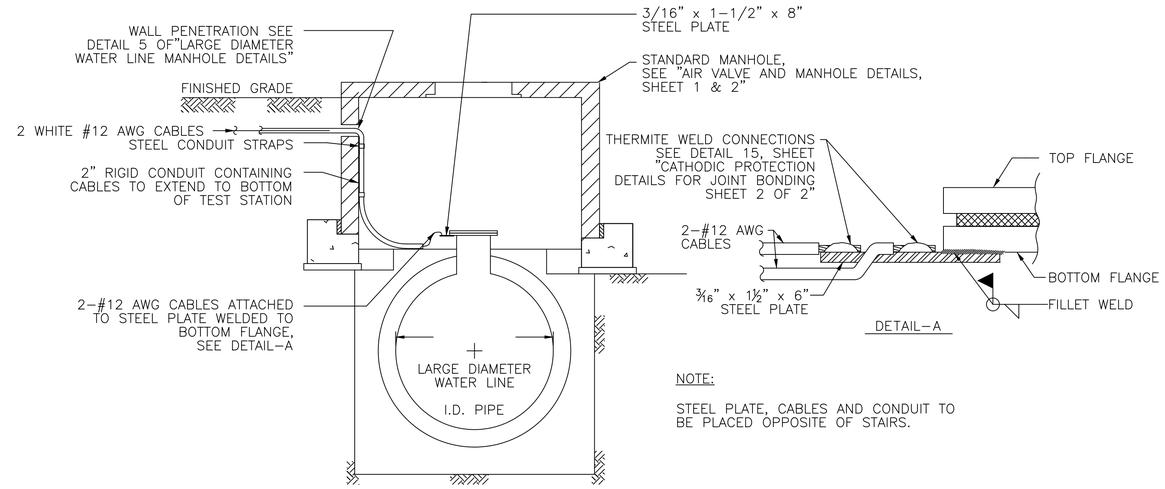

NOTE:

STEEL PLATE, CABLES AND CONDUIT TO BE PLACED OPPOSITE OF STAIRS.

7 TEST STATION INSTALLATION IN MANHOLE

STANDARD LDWL
CATHODIC PROTECTION DETAILS
FOR TEST STATIONS
(SHEET 3 OF 3)

NO SCALE

XX

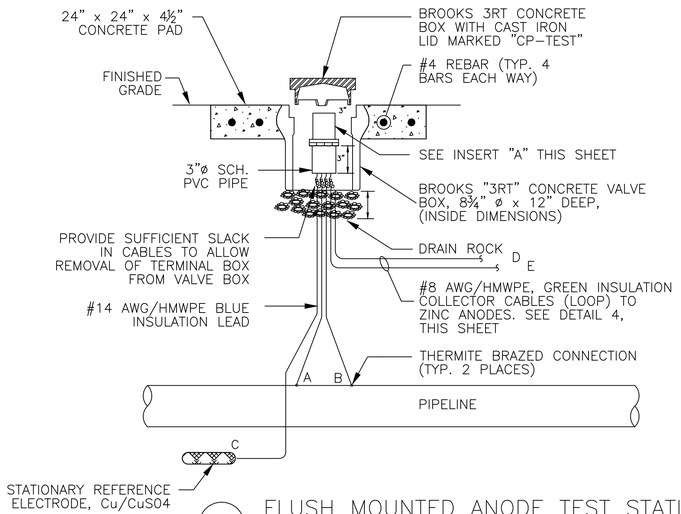

1 FLUSH MOUNTED ANODE TEST STATION

WIRE CODING:
* WIRES A & B ARE WHITE
* WIRES A & B ARE #12 AWG TW SOLID SINGLE CONDUCTOR WIRE
* WIRE C IS BLUE #14 AWG/HMWPE LEAD WIRE TO REFERENCE ELECTRODE
* WIRSE D & E ARE GREEN #8 AWG ANODE LEAD WIRE TO ANODE GROUND BED

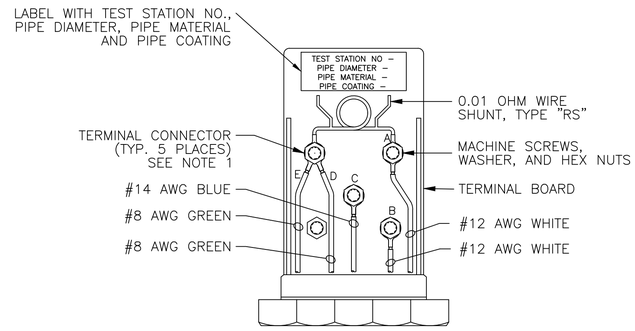

NOTES:

1. TERMINAL CONNECTORS SHALL BE RING TONGUE, BRAZED, COPPER, NON–INSULATED WITH ," ¼" STUD SIZE

– FOR WIRE SIZE 14–10 AWG, USE THOMAS & BETTS 54101 OR APPROVED EQUAL.

– FOR WIRE SIZE 8 AWG, USE THOMAS & BETTS 54130 OR APPROVED EQUAL.

INSERT "A"

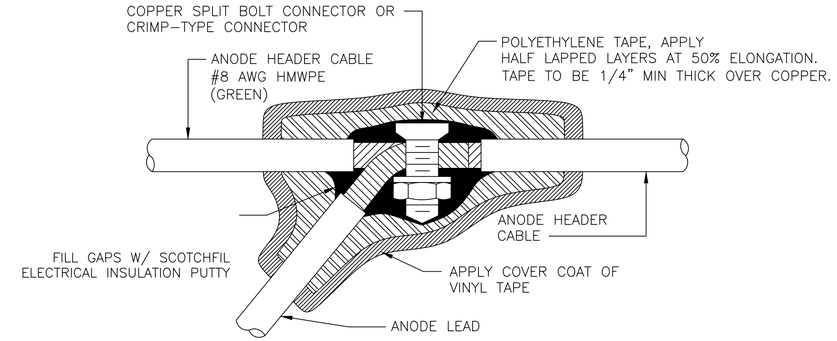

NOTES:

1. MAKE SPLICE WATERPROOF
   A. SMOOTH ALL IRREGULAR SURFACES WITH ELECTRICAL INSULATION PUTTY.
   B. APPLY 2 LAYERS OF HALF LAPPED RUBBER SPLICING TAPE.
   C. APPLY 2 LAYERS OF HALF LAPPED VINYL ELECTRICAL TAPE.
2. NUMBER OF WIRES MAY VARY PER SPLICE

2 SPLICE DETAIL

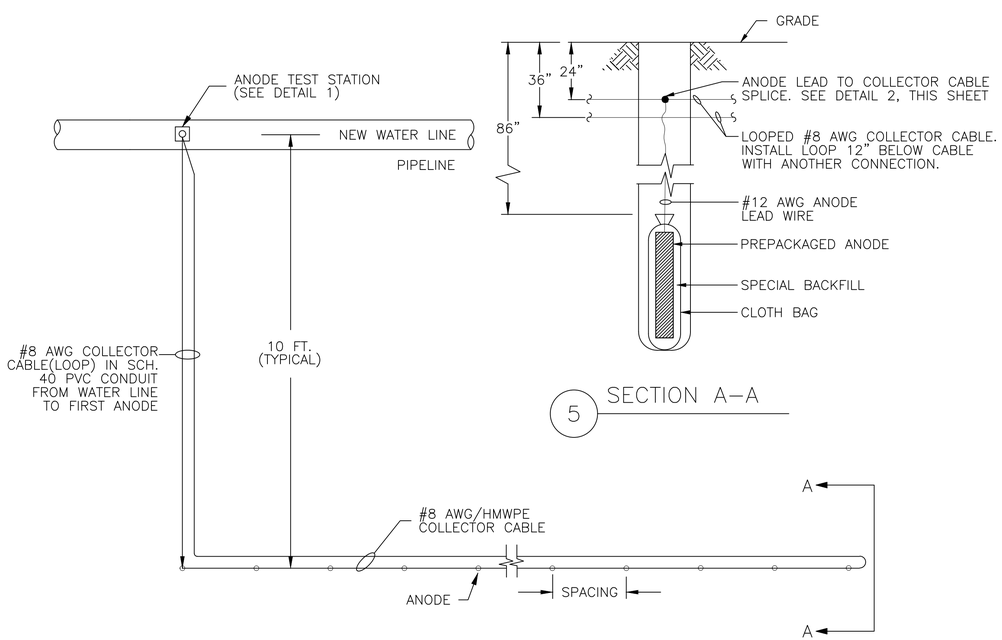

5 SECTION A–A

4 ANODE TEST STATION PLAN

NOTE: FOR ANODE SIZE AND SPACING REQUIREMENT, SEE "DESIGN SUMMARY" SCHEDULE

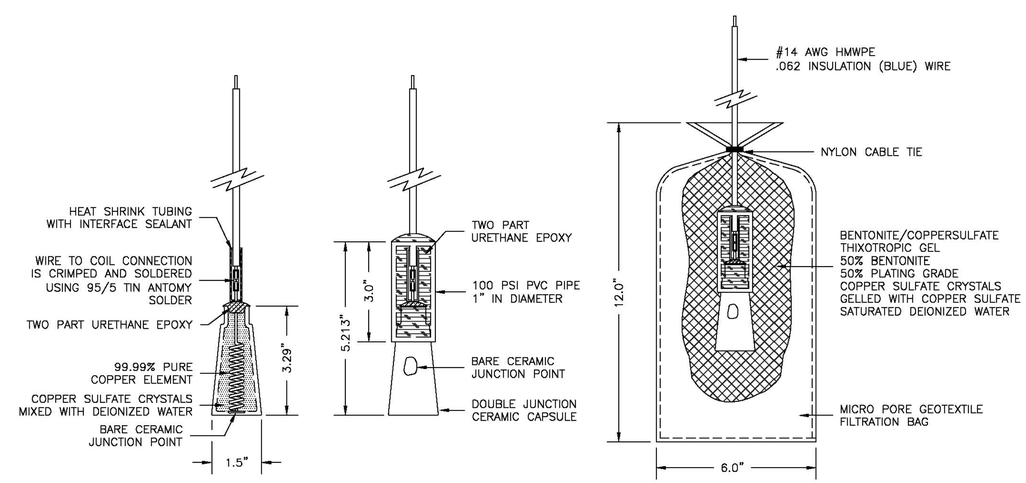

3 Cu/CuSO4 PERMACELL PLUS STATIONARY REFERENCE CELL

STANDARD LDWL
CATHODIC PROTECTION DETAILS
FOR TEST STATIONS & ANODES

NO SCALE

XX

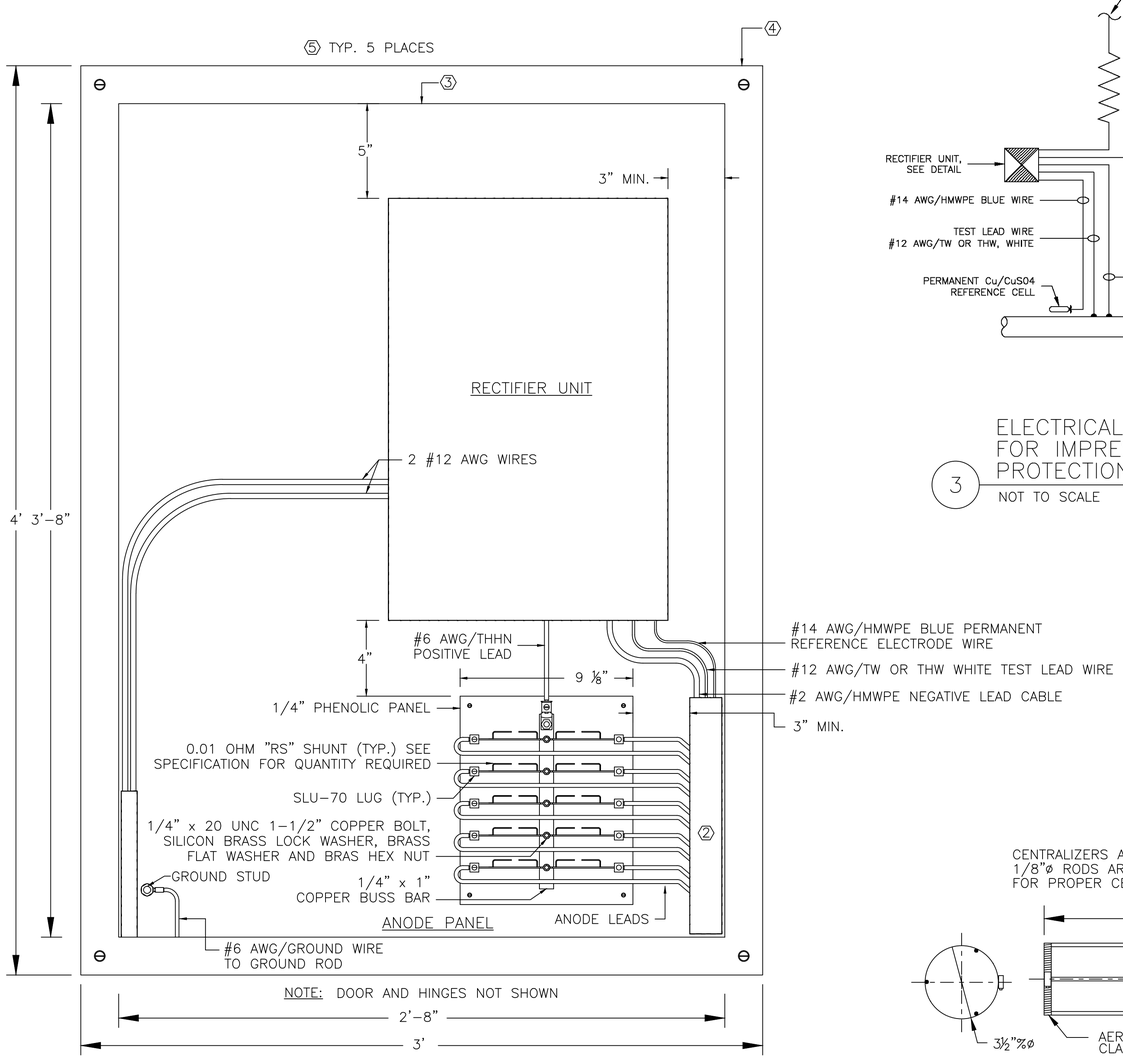

1 CATHODIC PROTECTION CABINET
NO SCALE

FOR ⬡ NOTES, SEE SHEET 2 OF 2.

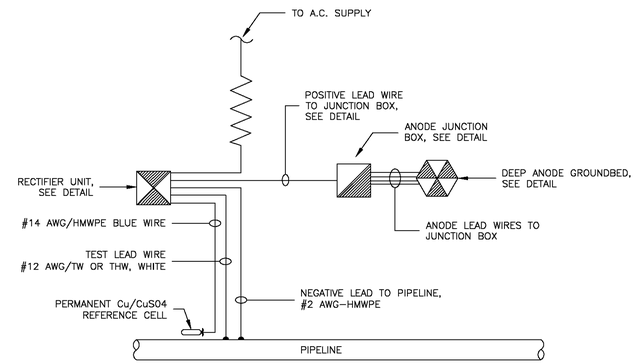

3 ELECTRICAL DIAGRAM SCHEMATIC FOR IMPRESSED CURRENT CATHODIC PROTECTION SYSTEM
NOT TO SCALE

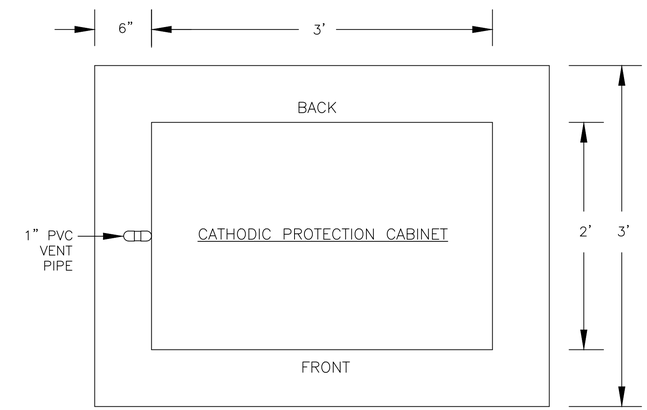

4 PLAN VIEW OF CONCRETE PAD WITH CATHODIC PROTECTION CABINET
NO SCALE

CENTRALIZERS ARE SHIPPED STRAIGHT AS SHOWN BELOW.
1/8"ø RODS ARE BENT AS SHOWN RIGHT TO FIT THE HOLE
FOR PROPER CENTERING OF ANODE.

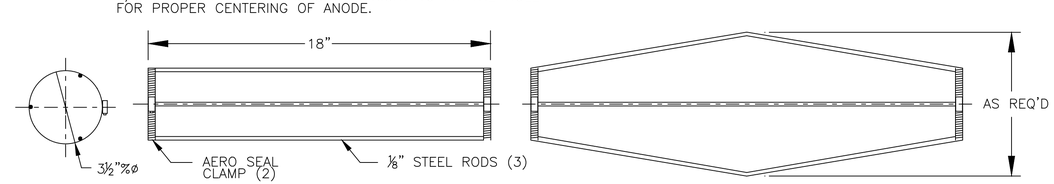

2 ANODE CENTRALIZER
NO SCALE

STANDARD LDWL
CATHODIC PROTECTION RECTIFIER
& DEEP ANODE GROUND BED
(SHEET 1 OF 2)

NO SCALE

XX

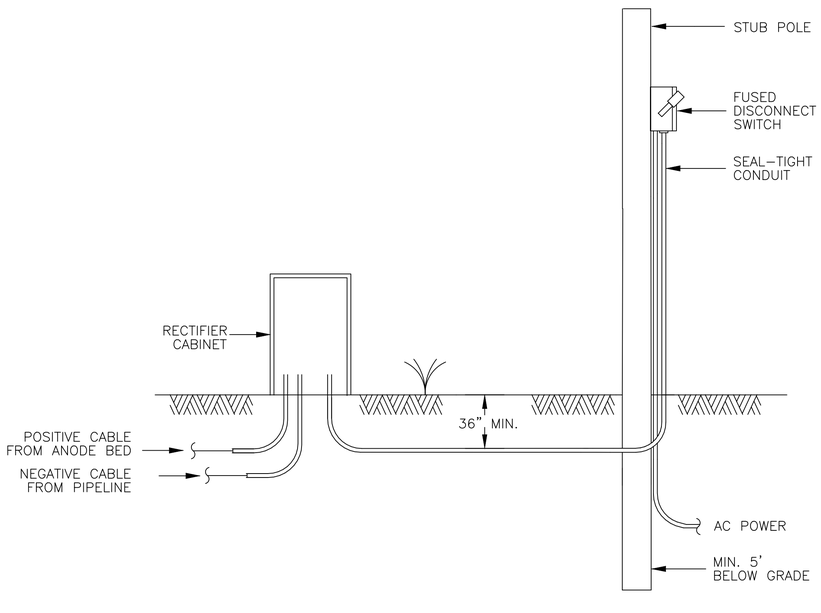

5 AC SERVICE FOR RECTIFIER

NO SCALE

RECTIFIER INFORMATION

PIPE MATERIAL	RECTIFIER NO.	STATION NO.	SIZE OF RECTIFIERS (AMPS/VOLTS)	NUMBER OF ANODES	ANODE WELL DEPTH	ACTIVE LENGTH	INACTIVE LENGTH
DIELECTRIC COATED STEEL PIPE							
CEMENT MORTAR COATED STEEL PIPE							
PRESTRESSED CONCRETE CYLINDER OR BAR WRAPPED PIPE							
DUCTILE IRON PIPE WITH POLY WRAP							

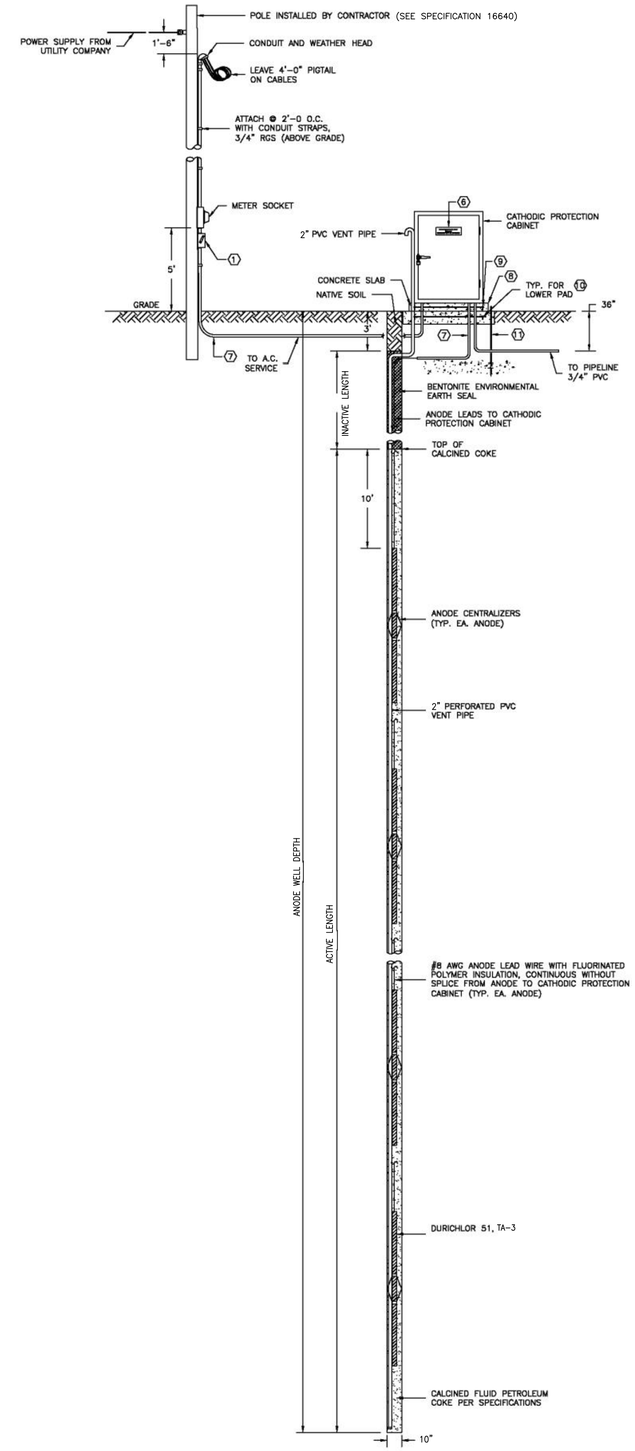

6 TYPICAL DEEP ANODE GROUND BED AND A.C. SERVICE FOR CATHODIC PROTECTION CABINET

NO SCALE (SEE SPECIFICATION 16640 FOR DETAILS)

KEYED NOTES:

1. FUSED DISCONNECT SWITCH IN A NEMA 1 ENCLOSURE WITH 1-30A FUSED DISCONNECT SWITCH.
2. PLASTIC WIRING DUCT (PANDUIT OR EQUAL) 2" W. x 4" H. (MIN.) LENGTH AS REQUIRED. FURNISH WITH COVERS.
3. BACK PANEL LOCATED INSIDE OF ENCLOSURE.
4. ENCLOSURE: 36" W. x48" H. x 24" D., 12 GA. TYPE 304 S.S. NEMA 4X, SINGLE DOOR, FREE STANDING, PROVISIONS TO PADLOCK UNIT, LIFTING EYES AND GROUNDING STUD ON DOOR. PROVIDE LOUVERED DOOR TO VENTILATE RECTIFIER UNIT. PROVIDE DRIP SHIELD AND INSIDE SCREEN TO REPEL INSECTS.
5. PLACE STICKERS THAT READ:

   "DANGER
   HIGH VOLTAGE
   KEEP OUT"

   ON ALL FOUR SIDES AND TOP OF ENCLOSURE.
6. PROVIDE PERMANENT ENGRAVED NAME PLATE (BLACK LETTERS ON WHITE BACKGROUND) THAT READS: "CATHODIC PROTECTION CABINET, PROPERTY OF CITY OF HOUSTON, IN CASE OF EMERGENCY CALL 311"
7. MAKE TRANSITION FROM PVC CONDUIT (UNDERGROUND TO RGS CONDUIT) ABOVE GROUND.
8. COORDINATE SIZE OF CONCRETE PAD WITH SIZE OF CABINET. THE CONCRETE PEDESTAL THAT THE CABINET RESTS ON TO BE 3" WIDER THAN THE CABINET ON ALL SIDES.
9. #4 GRADE 60 REBAR @12" OC BOTH WAYS.
10. #5 GRADE 60 REBAR @12" OC BOTH WAYS.
11. 3/4" x 10' GROUND ROD AND #6 COPPER GROUND CABLE.

STANDARD LDWL
CATHODIC PROTECTION RECTIFIER
& DEEP ANODE GROUND BED
(SHEET 2 OF 2)

NO SCALE

XX